85HE
PROGRAM
GUIDE

Programming Manual

REVISION # 6
REVISION DATE 11/07/18
80150349 PN:61002064

Button Configuration

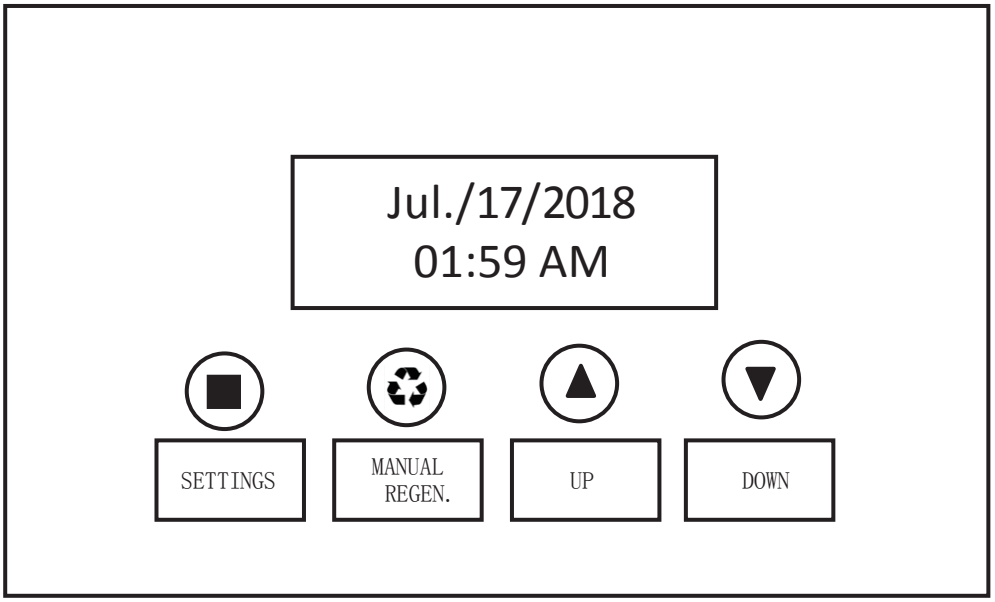

Key Pad Configuration

SETTINGS	This function is to enter the basic set up information required at the time of installation.
MANUAL REGEN / CYCLE	This function is to initiate an immediate or delayed manual regeneration.
DOWN / UP	These buttons are used to increase or decrease the value of the settings while in the programming mode.

Programming Levels

There are 4 levels to the valve program. Master options and Factory options are typically adjusted at the factory. These options link the PCB function with the type of control valve and should not be tampered with. Advanced options are used to configure the unit when the valve is assembled to the tank so that it can function as the proper size and intended system operation. Settings are the final options chosen when the unit is installed to a specific location.

PROGRAM LEVEL	USER ACCESS
MASTER	These settings are programmed by the factory. The settings are important for the operation of the valve that should only be changed by a qualified person.
FACTORY	These settings are programmed by the factory and should be adjusted when the valve is assembled into a unit or system. It contains important settings so the valve will operate properly for the type of system it is intended for. The settings should only be changed by qualified person.
ADVANCED	These settings are programmed when the unit is assembled. The settings should only be adjusted by a qualified person.
SETTINGS	These settings are programmed when the unit is installed. The settings should only be adjusted by a qualified person.
OEM SETTINGS	These settings are programmed when the unit is installed for the conditions of some special functional requirements.. The settings should only be adjusted by a qualified person.
DIAGNOSTIC	These interfaces record the errors found during the use of the control valve and the amount of historical water used.

Main Display Options

The main display page will pause on the Date and Time page for 5 seconds. Then it will continually scroll through all of the system diagnostic display pages. Depending on the Valve Type some pages will not be displayed; To manually scroll through the diagnostics, press the down or up key.

To reset the TOTAL REGENS, TOTAL GALLONS OVER RUN TOTAL, or PEAK flow rates, press and hold the MENU until the value changes to zero.

PARAMETER	DESCRIPTION
Jul./17/2018 8:30 PM	Month, Day, Year, Time
TOTAL 4 DAYS REMAIN 3 DAYS	The number of days remaining before regeneration. This option is only in filter mode.
TOTAL 1,500 GAL REMAIN 1,200 GAL	The total amount is the system capacity when fully regenerated. The remaining is the capacity left in the system.
PEOPLE 2 RESERVE 150 GAL	Number of people in the household and the calculated reserve capacity. When remaining reaches reserve capacity a regeneration will be scheduled.
EST. DAYS TO NEXT REGEN 06 DAYS	The estimated number of days until the next regeneration will occur.
LAST REGEN 9/24/12	The date of the last regeneration.
TOTAL REGENS 10	The total number of regenerations.
TOTAL TREATED 1590 GAL	The total amount of gallons treated by the system.
OVER RUN TOTAL 0500 GAL	The total amount of water that has exceeded the system capacity over the last 4 regenerations. When remaining goes to zero, the gallons used will be added to over run total.
CURRENT 1.5 gpM PEAK 6.5 gpM	The current flow rate and the peak flow rate since the last regeneration.
DAY OVERRIDE OFF	The maximum number of days for the regeneration cycle.
RINSE OVERRIDE OFF	The current setting for skip the rinse cycle.
DELAYED REGEN OFF	Advises whether a delayed regeneration has been scheduled manually or automatically.
REGEN TIME 2:00 AM	The current setting for regeneration time.
REFILL TIME 3:00 MIN	The current calculated refill time.
(INFO.)	The Dealer information (when OEM setting-DEALER INFO. setting was Enable.)
VALVE MODE SOFTENER UF	The current setting of the valve mode.
ID 85HEUF-SXXXX	The valve ID.

Manual Regeneration

DELAYED REGENERATION

Press and release the MANUAL REGEN Button to set a delayed regeneration that will occur at the regeneration time. To cancel the delayed regeneration, press and release the MANUAL REGEN button.

IMMEDIATE REGENERATION

To start an immediate regeneration (or step valve through each position), press and hold the MANUAL REGEN Button for 3 seconds (until beeps). Choose"IMMEDIATELY" or "FULL CYCLE IMM."(UF only),and press the MANUAL REGEN Button,The valve will start an immediate regeneration. Press any key to skip to the next cycle.

Choose "VACATION MODE"and input estimated holiday days,the valve will enter the regular flush without brine and refill, when no water is used during the setup.

Settings

Press SETINGS key (3 SECONDS / BEEP)

VALVE TYPE	85HE UF	85HE DF/850/650			85HE DF/851/651
VALVE MODE	SOFTENER UF	SOFTENER DF	CHEMFREE-AIR	GREENSAND	B.W. FILTER

TIME OF DAY 12:01 PM	TIME OF DAY 12:01 PM	TIME OF DAY 12:01 PM
YEAR 2012	YEAR 2012	YEAR 2012
MONTH AUGUST	MONTH AUGUST	MONTH AUGUST
DAY 21	DAY 21	DAY 21
SET HARDNESS 20.0 gpG	SET HARDNESS 20.0 gpG	REGEN DAYS 3 DAYS
SET PEOPLE 4	SET PEOPLE 4	GALLONS OFF
SALT SETTING HIGH EFFICIENCY STANDARD IRON & MN	SALT SETTING HIGH EFFICIENCY STANDARD IRON & MN	LOAD DEFAULT NO
WATER SOURCE MUNICIPAL WELL / OTHER	WATER SOURCE MUNICIPAL WELL / OTHER	PROGRAMMING COMPLETE
REGEN. TIME 2:00 AM	REGEN. TIME 2:00 AM	
LOAD DEFAULT NO	LOAD DEFAULT NO	
PROGRAMMING COMPLETE	PROGRAMMING COMPLETE	

CAUTION:
The values in this page are for illustration purpose and can be changed by the factory without notice. Please contact Customer Service to confirm proper settings.

TIME OF DAY, YEAR, MONTH, DAY,

Time of day is for normal operation of system and the scheduling of the regeneration time. The date is used in a diagnostic function to track the last time the system regenerated.

SET HARDNESS

This value is the maximum compensated water hardness in grains per gallon of the raw water supply. It is used to calculate the system capacity. If Ferrous Iron is present add 4 gpg for every 1 ppm of Ferrous Iron.

SET PEOPLE

This value is the number of people living in the home. It is used to calculate the amount of water needed for daily use and the reserve capacity of the system.

SALT SETTING

There are 3 settings to choose in the MENU SETTINGS. High Efficiency, Standard Capacity, and IRON & MN. These settings will determine the salt dosage and capacity for the system.

WATER SOURCE

This setting will determine if the BACKWASH OVERRIDE function will be on or off. Select MUNICIPAL if the water source is clean (<1NTU turbidity) and the system will skip the back wash cycle based on the setting in BACKWASH OVERRIDE.

Select WELL / OTHER if any Iron or Manganese is present or if the water source is not clean (>1NUT turbidity). The system will back wash every time.

REGEN TIME

This setting determines the time of day to perform a scheduled regeneration.

REGEN DAYS

This value is the number of days between regenerations or back washes to clean the filters.

GALLONS

Default value is OFF. Adjust the GALLONS to set the capacity. This will cause the unit to regenerate either when the gallons remaining goes to zero or the days between regeneration is zero. Which ever occurs first.

LOAD DEFAULT

If the selection is made, the process time of each regeneration cycle will be reset to the default value setting.

Advanced Options

Press UP + DOWN (3 SECONDS / BEEP)

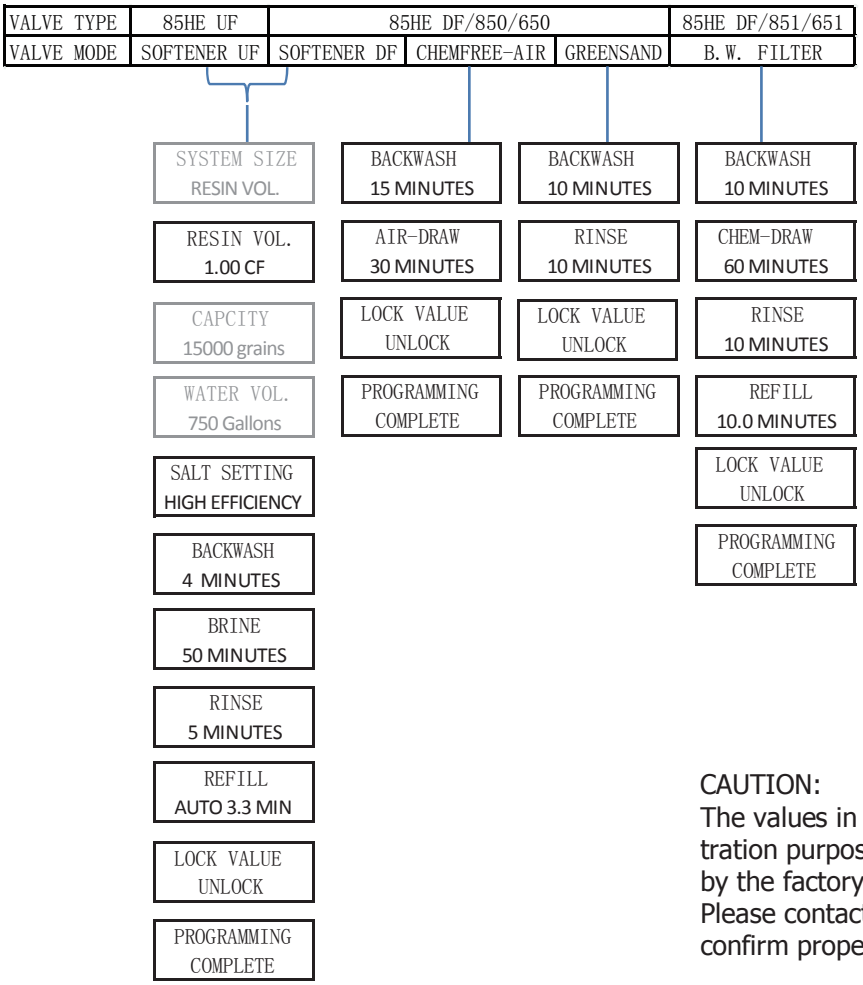

CAUTION:
The values in this page are for illustration purpose and can be changed by the factory without notice.
Please contact Customer Service to confirm proper settings.

UNIT SIZE

This setting can select "RESIN VOL.or CAPACITY or WATER VOL."\B\C, (CAPACITY or WATER VOL. when the advance setting is enabled in the OEM settings.The "RESIN VOL."is the amount of ion exchange media used in the system. The value is used to calculate system capacity and refill time. It is also used to select the pre-engineered valve cycle settings. "C" designates a cabinet model.

CYCLE SETTINGS (BACKWASH, BRINE, RINSE)

The system has pre-engineered default settings for every valve mode, unit size, and salt setting. The settings are optimized to maximize salt and water use efficiency. The settings can be manually adjusted. In SOFTENER UF or SOFTENER DF mode, refill is automatically calculated. In GREENSAND mode, the value should be manually adjusted.

LOCK VALUE

This setting locks the value set in this previous page, and the end user will not be able to modify it before this setting is changed to UNLOCK.

Factory Options

Press SETTINGS + MANUAL REGEN. (3 SECONDS / BEEP)

VALVE TYPE	85HE UF	85HE DF/850/650			85HE DF/851/651
VALVE MODE	SOFTENER UF	SOFTENER DF	CHEMFREE-AIR	GREENSAND	B.W. FILTER

LANGUAGE ENGLISH FRENCH	LANGUAGE ENGLISH FRENCH	LANGUAGE ENGLISH FRENCH
UNITS GALLONS METRIC	UNITS GALLONS METRIC	UNITS GALLONS METRIC
HARDNESS UNITS gpG	HARDNESS UNITS gpG	SMART CLEAN OFF
HIGH EFFICIENCY 3.0 lbs/CUFT	HIGH EFFICIENCY 3.0 lbs/CUFT	PROGRAMMING COMPLETE
HIGH EFFICIENCY 5000 GRAINS	HIGH EFFICIENCY 5000 GRAINS	
STANDARD 6.0 lbs/CUFT	STANDARD 6.0 lbs/CUFT	
STANDARD 4150 GRAINS	STANDARD 4150 GRAINS	
IRON & MN 12.0 lbs/CUFT	IRON & MN 12.0 lbs/CUFT	
IRON & MN 2500 GRAINS	IRON & MN 2500 GRAINS	
REFILL FLOWRATE 0.20 gpM	REFILL FLOWRATE 0.30 gpM	
BRINE MAKE TIME 30 MINUTES	DAILY RESERVE 4 DAYS AVERAGE	
BRINE PRE-FILL% 70 %	DAY OVERRIDE OFF	
DAILY RESERVE 4 DAYS AVERAGE	RINSE OVERRIDE OFF	
DAY OVERRIDE OFF	BW. OVERRIDE 10 REGENS	
RINSE OVERRIDE OFF	FORCED REGEN. OFF	
BW. OVERRIDE 10 REGENS	SMART CLEAN OFF	
FORCED REGEN. OFF	PROGRAMMING COMPLETE	
SMART CLEAN OFF		
PROGRAMMING COMPLETE		

CAUTION:
The values in this page are for illustration purpose and can be changed by the factory without notice.
Please contact Customer Service to confirm proper settings.

Factory Options (Continued)

CHEMFREE -AIR

This valve mode is for the operation of a two tank filter (Tank #1 Air, Tank #2 Filter).

GREENSAND

This valve mode is for the operation of a manganese greensand filter regenerated with potassium permanganate feeder.

B.W. FILTER (BACK WASH FILTER)

This valve mode is for the operation of a standard back wash filter. i.e. Carbon, Multi-Media, Neutralizer

SOFTENER DF (DOWN FLOW)

This valve mode is for the operation of a down flow softener. The regeneration sequence is: 1. Back Wash, 2. BRINE, 3. RINSE, 4 REFILL.

SOFTENER UF (UP FLOW)

This mode is for the operation of an up flow regenerating softener. The amount of salt used each regeneration is proportional to the capacity remaining in the system. A preset amount of brine (Default is 70%) is prepared after a normal regeneration. Just before a regeneration is scheduled, fresh water is added to the brine tank to "top off" the already prepared 70% of brine. The total amount of brine used to regenerate the system is proportional to the capacity remaining.

I.e. If the system has 10% capacity remaining, then only 90% of the salt dosage is needed to restore capacity to 100%. 70% of the brine is already prepared (and fully saturated) so 20% is added so that the total of 90% is prepared.

When a standard regeneration is started, the valve will move first to the refill position to add water to the brine tank. The amount of water added is equal to the calculated refill time for the salt dosage X Brine Tank Refill%. The valve then will return to service for the amount of Brine Make Time. When this is complete the valve will move to the Brine position.

The regeneration sequence is 1. BRINE MAKE (REFILL), 2. BRINE, 3. BACKWASH, 4 RINSE, 5. REFILL.

LANGUAGE

Current available language is English etc.

UNITS

Current unit of measure is gallons and Metric.

EFFICIENCY & CAPACITY SETTINGS

There are 3 settings to choose in Settings. High Efficiency, Standard Capacity, and Iron & Manganese. The values for these settings are set in the Factory Options and are used to calculate the system capacity and refill time.

REFILL

This value should match the BLFC flow washer. It is used to calculate the refill time.

BRINE MAKE TIME

This value is the time allowed for the salt to dissolve in the water to create the brine solution. The value is the amount of time ahead of the scheduled regeneration time that the water will be added to "top off" the brine already prepared in the brine tank.

BRINE PRE -FILL%

This is the percentage of the water that will be added to the brine tank after a regeneration. The default is 70%. The remaining amount of water will be added just prior to the regeneration and will be proportional to the amount of capacity left in the system.

DAILY RESERVE

This value is used to calculate the reserve capacity. Reserve Capacity = No. People x DAILY RESERVE.
The 4-days average option is used to calculate the daily water consumption for 28 days, and the average daily water consumption for each day of the week is calculated separately.

BW.(RINSE) OVERRIDE

This setting can be used to skip the backwash(rinse) cycle.As an example if the setting is 10, the system will skip 10 backwash(rinse) cycles. The setting will only work if the WATER SOURCE is set to MUNICPAL for clean water applications.

FORCED REGEN

When set to ON, the system will start a forced regeneration when the remaining capacity reaches 3% and for no water used by 10 minutes. The regeneration consists of 20 minutes of Brine and 10 minutes of Rinse. The 30 minutes regeneration will restore up to 33% of the system capacity. At the next regeneration time (2:00 AM), the system will automatically perform a standard regeneration to restore capacity to 100%.

SMART CLEAN

When set to ON, the system will perform a 10 (adjustable)minute backwash and rinse if there is no waterflow detected after 7 (adjustable)days. The regeneration will occur at the scheduled REGEN TIME.

Master Options

Press UP + DOWN + MANUAL REGEN. SECONDS / BEEP)

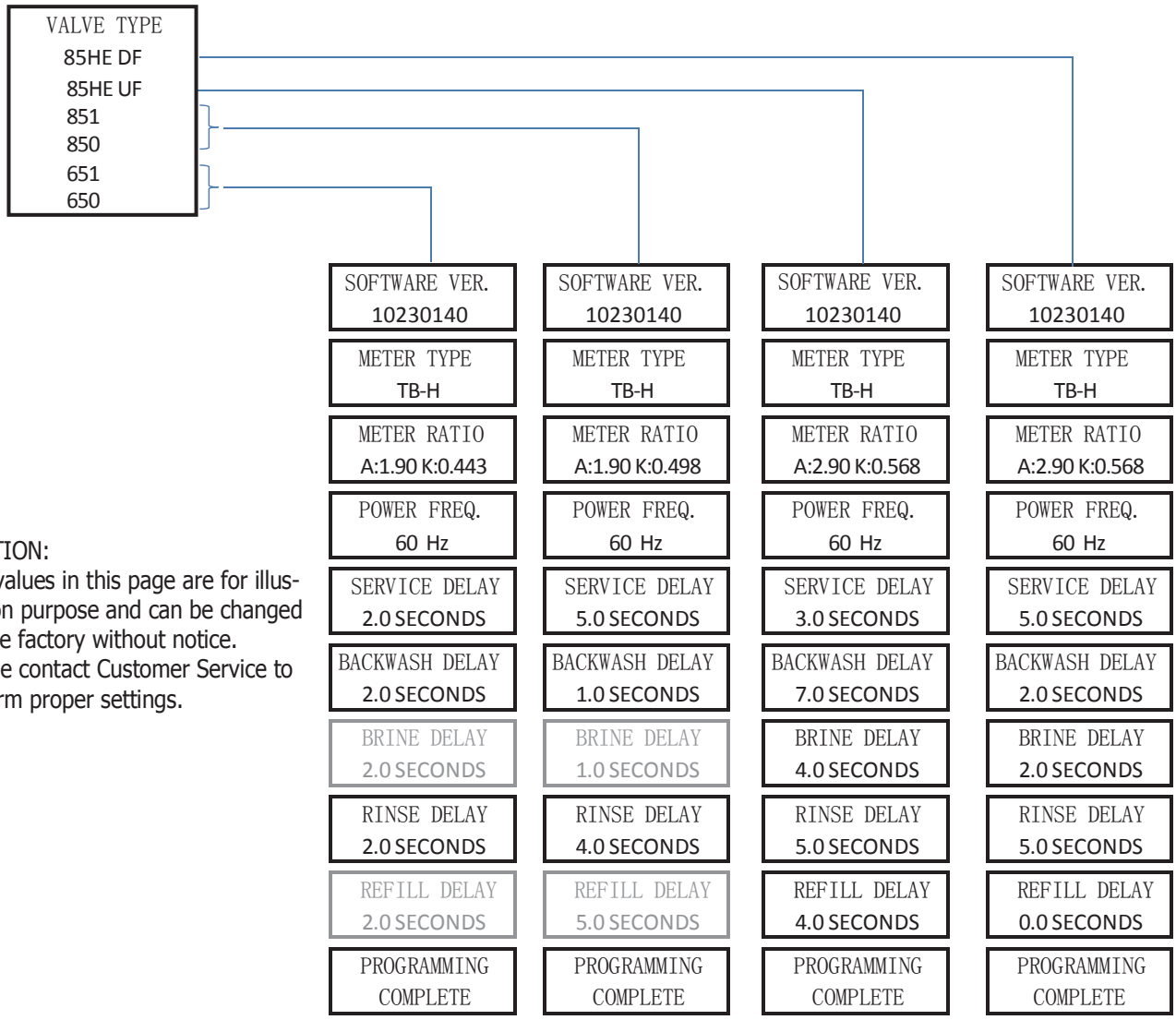

CAUTION:
The values in this page are for illustration purpose and can be changed by the factory without notice.
Please contact Customer Service to confirm proper settings.

VALVE TYPE

The valve must be designated for 85HE UF or 85HE DF or 85/65 valve body series. The up flow valve type is strictly for up flow water softener operation mode. A filter option is not available with the up flow valve type. If down flow is chosen, the valve operation may be changed from down flow softener operation mode to a filter operation mode in the Factory Settings ;850 and 851 is for softener or filter based 85 series valve body;650 and 651 is for softener or filter based 85 series valve body.

NOTE: It is not recommended to convert a 85HE UF valve to 85HE DF or vice versa. The valve body is a different structure and the piston is different.

METER RATIO

The meter ratio calibrates the pulse from the flow meter into gallons. This value is factory set and should not be changed.

DELAY SETTINGS

The delay settings are used to precisely stop the motor / piston in the correct position. There are different default settings for up flow versus down flow valve operation.

OEM Setting

Press DOWN for 8 SECONDS / BEEP and enter CODE:181)

CAUTION:
The values in this page are for illustration purpose and can be changed by the factory without notice.
Please contact Customer Service to confirm proper settings.

AUX IN LEAK DETECTION	Input Socket Functions: Leak Detection/Remote Start/Salt Sensor
AUX OUT CUT OFF WATER	Output Socket Functions: Cut Off Feed Water/Cut Off Outlet Water/ Output Control at Specified Regen. Step
EXCS. WATER USE 60 MINUTES	Excessive Water Use: Monitor the abnormal duration for continuous water use, alerting if there is continuous water use after 60(adjustable) minutes.
EXT. FLOW COND. 30 DAYS	Extended Flow Condition: Monitor the impeller meter if it is working properly, alerting if there is no waterflow detected after 30(adjustable) days.
LANGUAGE SET 000100	Set the available language options in language setting page.
ADVANCED SET DISABLE	In enabled status, different kinds of settings for system capacity are available for customization requirement. (1. Resin Volume 2. Capacity 3. Water Volume)
SALT REMINDER DISABLE	In enabled status, system will remind you to add salt based on the total salt volume and salt dosage used on each regen. cycle.
MIXING VALVE DISABLE	Set MIXING VALVE in enabled status if mixing valve installed, set MIXING VALVE in disable status if mixing valve not installed.
DEALER INFO DISABLE	In enabled status, dealer info can be set in programming.

Diagnostic

Press DOWN for 8 SECONDS / BEEP and enter CODE:101)

CAUTION:
The values in this page are for illustration purpose and can be changed by the factory without notice.
Please contact Customer Service to confirm proper settings.

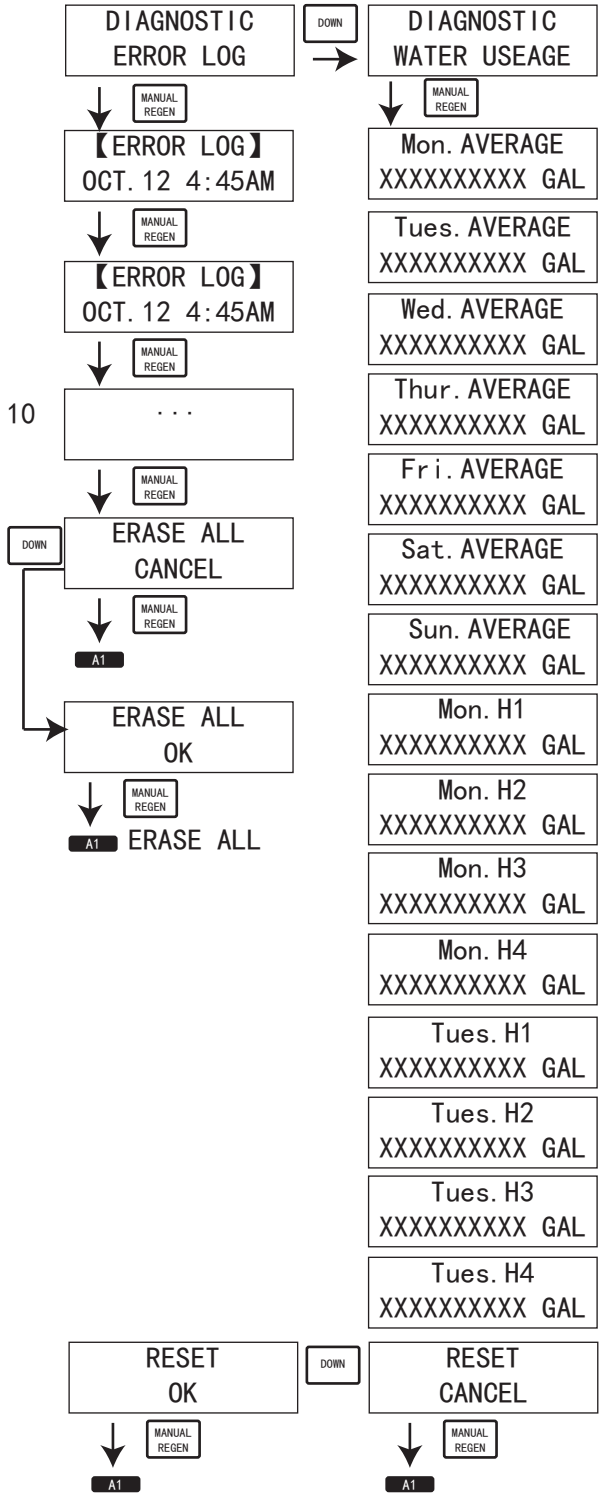

Note: A1 means MAIN page.