Pallas®
Alfa

USER MANUAL



Table of content

1. Standard design data 4
2. Warnings and precautions about the system 5
3. System components 6
3.1.1. System components for PALLAS 140 - 640 models 6
4. Working principle & control panel 10
4.1. Working principle 10
4.2. Control panel 12
5. Transportation storage 15
6. Installation 15
7. Commissioning 20
7.1 Cautions before commissioning 20
7.2 Commissioning steps 20
7.3 Adjustment of low and high pressure switches 23
7.4 Adjustment of conductivity meter 24
8. Operation & maintenance 25
8.1 Operation 25
8.2 Maintenance 25
9. Troubleshoot 35
10. Warranty conditions 38
10.1 System warranty conditions 38
10.2 General warranty conditions 38
10.3 Conditions assessed outside of the warranty 39

Other languages

Scan the QR code for other languages

Figure list

Figure 1-1: Cross Section View of Membrane 8
Figure 3-1: Front View of Pallas 440 Model RO Device* 19
Figure 4-1: Standard Pallas Control Panel Mimic Diagram 26
Figure 4-2: Cinque DIP Switch View 30
Figure 5-1: Profile View of Membrane 37
Figure 6-1: Perspective View of Pressure Switch 44
Figure 6-2: Adjustment of Pressure Switch 44
Figure 6-3: Standard Conductivity Meter Controller 46

Table list

Table 3-1: Pallas Series RO Models Component Difference Table 18
Table 3-2: System Components for between Pallas 140 – 440 Models 20
Table 3-3: System Components for between Pallas 140 – 440 22
Table 4-1: Standard Pallas Control Panel Mimic Diagram Explanation Table1 27
Table 4-2: Standard Pallas Control Panel Mimic Diagram Explanation Table 2 28
Table 4-3: DIP Switch Adjustment Tables 29
Table 7-1: Membrane Scaling Diagnostic 55
Table 7-2: Chemical cleaning Solution Selection Chart 58
Table 7-3: Chemical Cleaning Solution Preparation Table 61
Table 8-1: Troubleshoot Table 1 64
Table 8-2: Troubleshoot Table 2 65
Table 8-3: Troubleshoot Table 3 66
Table 8-4: Troubleshoot Table 4 67
Table 8-5: Troubleshoot Table 5 68

1. Standard design data

Pallas Alfa series Reverse Osmosis system is designed by expert engineers with LG membrane projection software. Projection is based on the membrane type LG BW 4040 UES. + LG BW 4040 ES

Below you will find the general data for the design:

Inlet water TDS	500 - 3000 mg/L
Inlet water Pressure	Min 2 bar
Inlet water pH	7.2
Silica (SiO2) Tolerance	Up to 25 ppm
Inlet Water Temperature	15 ° C
Iron (Fe) Tolerance	0,05 ppm (If ASC dosages, will be 0,2 ppm)
Hidrogen Sulfid Tolerance	0 ppm (zero)
Turbidity Tolerance	NTU < 1
Residual Chlorine	< 0.1 ppm
Oil Grease Tolerance	0 ppm (zero)
SDI	< 5
Microbiological pollution	Must not exist.

2. Warnings and precautions about the system

- Please perform the maintenance as described in this manual under chapter Operation & Maintenance.
- Please disconnect the main power supply before doing any maintenance or repair on the control panel.
- Please do not disassemble any equipment if the system is pressurized or if you are not sure.
- Inlet and outlet valves should not be closed while the system is working.
- System is designed to use only for brackish water and municipal water treatment (see standard design data).
- Needle valve on concentrated water line must not be closed while the system is working.
- Please use protective equipment during the system maintenance. Protective clothing and equipment should be used for all times. Especially face, eyes, hands and neck should be protected, any contact with chemicals and chemical vapors can cause serious health issues.
- Voltage changes should be checked periodically. Electrical lines which feeds the system must be earthed; precautions should be taken against phase change or voltage drop.
- In the water treatment system, water may be conditioned with the help of chemicals. Chemicals are used for pre or post treatment such as chlorine, sodium metabisulfite, acid, caustic. Among these chemicals, acid is a highly corrosive chemical and may cause severe injuries and skin burning differently from other chemicals. Operator staff must pay attention for all chemicals, but more attention for acid.
- System should be protected against the risk of freezing.
- System should be operated at the range of flow rate that is expressed in its technical specifications. Maximum operating temperature is 40°C. System must not be operated over that temperature.
- Once the membranes are installed, the system must be filled with water or SMBS to protect the membranes, if not, the system will not work properly. The system needs to be operated at least 2h / day, if a long shut down is planned, please follow the procedure described in this manual.

3. System components

3.1.1. System components for PALLAS 140 - 640 models

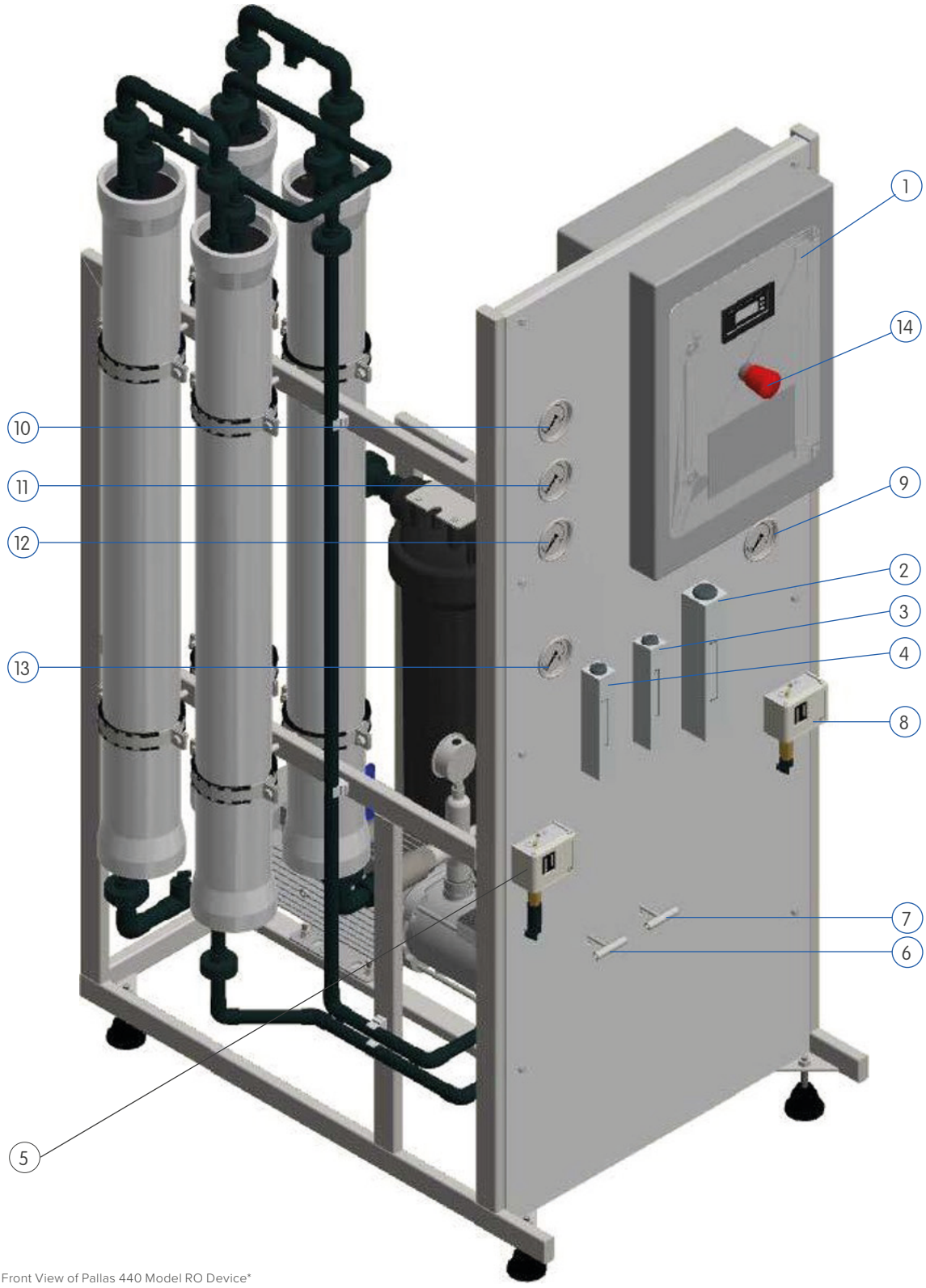

Figure 3-1: Front View of Pallas 440 Model RO Device*

1 Control panel

It allows the system to be controlled both manually and automatically. Operating status, fault status, conductivity related to the system information can be seen on the control panel.

2 Permeate water flow meter

It shows the amount of water that system products.

3 Recirculation flowmeter

It shows the recirculation(recycling) flow in the system.

4 Concentrate waterflowmeter

It shows the amount of the rejectwater in the system.

5 High pressure switch

In order to prevent the system from damaging any equipment with high pressure; provides to the system to stop when the pressure rises above the set value.

6 Concentrate water control valve

It is used to increase or decrease the amount of Reject water from the system.

7 Recirculation control valve

It is used to increase or decrease the amount of water to be returned from the waste line to inlet of the system in order to adjust the recovery of the system.

8 Low pressure switch

It stops the system when pressure value decreases under set value to prevent working of the system with low pressures or working of high pressure pump without water.

9 Cartridge filter outlet manometer

It shows cartridge filter outlet pressure.

10 1st stage pressure manometer

It shows the inlet pressure of the raw water comes from a high pressure pump to the membranes in the first stage.

11 2nd stage pressure manometer[1]

It shows the inlet pressure of the concentrated waste water comes from the first stage to the membranes in the second stage.

12 3rd stage pressure manometer[2]

It shows the inlet pressure of the concentrated waste water comes from the 2nd stage to the membranes in the 3rd stage.

13 Concentrate water outlet manometer

It shows the pressure of concentrated water going out from the last stage of the system.

14 Emergency stop button

It is for a quick stop for the system in case of an emergency situation.

1. It is not included in 140 model. 2. It is not included in 140 and 240 model. Table 3-2: System Components for between Pallas 140 – 440 Models

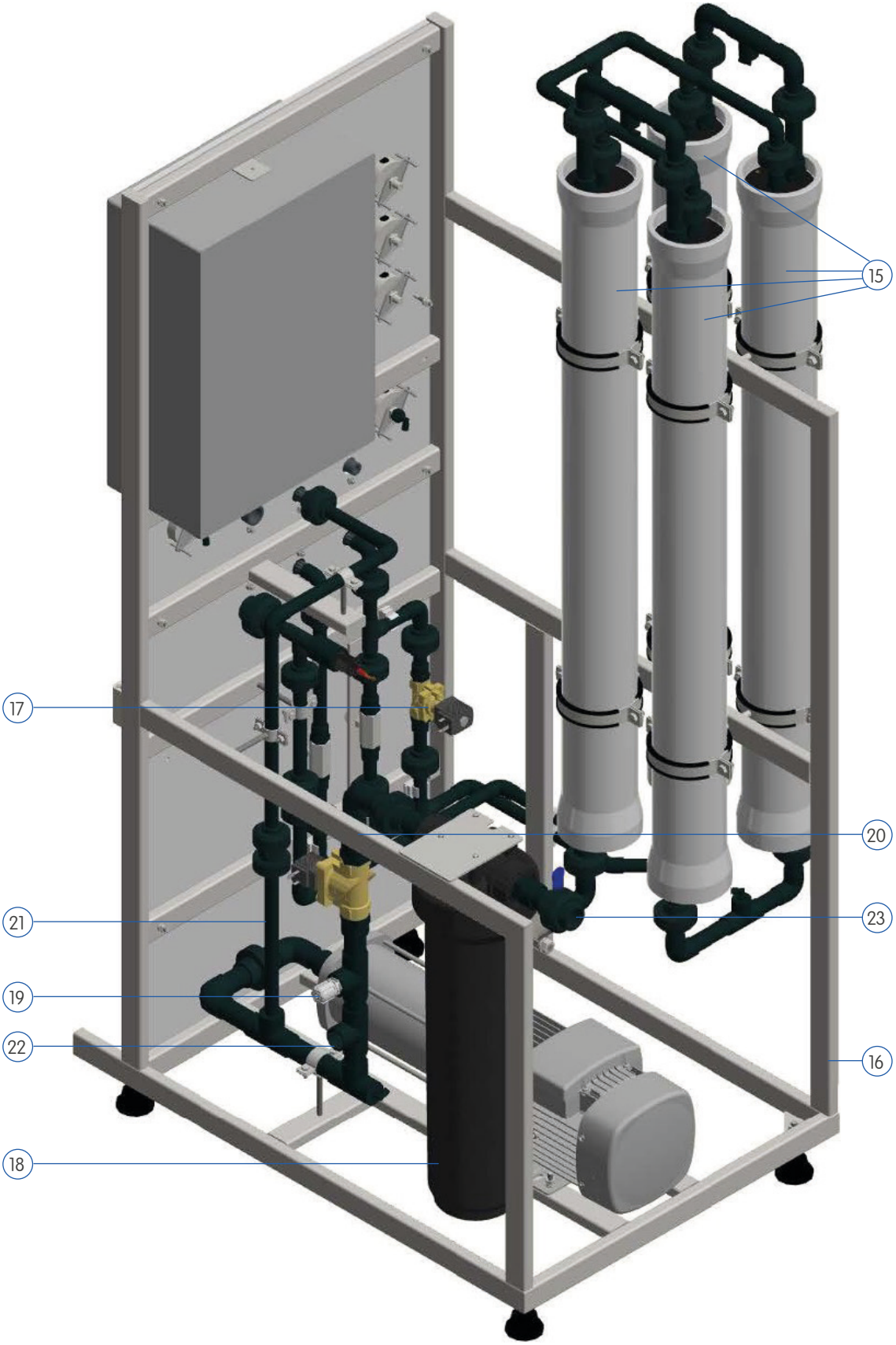

Figure 3-1: Rear View of Pallas 440 Model RO Device*

15 Membrane vessels

It is the vessel where the membranes are placed.

16 High pressure pump

It provides the required pressure for water to pass through the membranes.

17 Autoflush valve

It provides the membranes to make flush by opening periodically.

18 Cartridge filter

It is a mechanical filter that allows the water coming out from pre treatment to be filtered at 5 µ sensitivity.

19 Antiscalant dosage point

In case of antiscalant usage, you need to dose antiscalant from here.

20 Inlet solenoid valve

Feed water is fed to the system by opening of this valve automatically.

21 Recirculation line

The line which some of concentrate water is fed to inlet water.

22 Cip inlet connection point

The water or solution (permeate water or cleaning solution) in CIP tank enters to system from here.

23 Feed water inlet point

Feed water is fed to system from here.

1. It is not included in 140 model. 2. It is not included in 140 and 240 model. Table 3-2: System Components for between Pallas 140 – 440 Models

4. Working principle & control panel

4.1. Working principle

In this part, working principle of Pallas Series Reverse Osmosis (RO) systems will be explained.

Basically, RO system inlet water passes through 5-micron sediment cartridge filter which is included in the delivery. After that same water passes through high pressure pump and its pressure increases until it reaches to RO system design pressure value. After that, permeate water is filtered through the membrane material and started to be collected in the middle channel of the RO membranes by help of high pressure. This permeate water is collected and directed to desired location. Some part of RO inlet water cannot pass to membrane middle channel and it remains at outside part of the membrane in the membrane pressure vessel. This water is named as "concentrate water" and it is sent to the drain. Permeate and concentrate water amounts depend on membrane projection calculations. The system must be operated according to calculations of projection software.

4.1.1 System Operation

System starts to work when operator gives start command to the system. When the system starts to work; if permeate tank is not full and if there is no alarm on the system,

1. If feed pump is working related to RO system, the pump will work with 3 seconds delay. If there is no connection of the feed pump to RO, again there will be a 3 seconds delay but there is no effect to the operation status of the feed pump.
2. Inlet valve is opened after operation of the feed pump or after 5 seconds of finishing 3 second delay.
3. Enough amount is fed to the system after opening the inlet valve and after a 12 seconds delay, high pressure pumps and dosage pumps work together.[3]
4. At the end of 15 seconds delay, the auto-flush valve is opened and it remains open for 60 seconds Permeate water starts to produce after closing auto-flush. Every start of hours, auto-flush is opened and and it remains open for 60 seconds. Duration of operation and waiting can be extended and shortened by the help of DIP Switch. Detailed information is explained at the section of 4.2.1.2 Setting. System goes on working until the system is stopped, receiving fault or for some problem related to the working principle.

4.1.2 Transition to Waiting Status of System

System stand-by means that stopping as like when operator gives stop command and restarting again itself without operator intervention after stopping factor is removed. The situations which cause stand-by phase are below:

1. Permeate water tank is full
2. Backwash start of pre-treatment
3. Raw water tank is empty
4. Any external connection which causes system to wait other than above ones (like dosage tank is empty)

3. If the feed water is not enough, the system will be stopped. During that stopping time the feed pump continues to work. After 6 seconds, the inlet valve is opened again. If pressure is reached enough level, high pressure pumps, dosage pumps, and auto-flush valves start to work. If there is not enough pressure, the inlet valve will be closed after 6 seconds. After that, the inlet valve is opened again 6 seconds later. If there is not enough pressure level again, the low pressure switch led flashes gives audible warnings and the alarm led on the control panel lights continuously and keeps the system in Alarm Mode 10 minutes. After 10 minutes later, the expressed procedure is followed with the same row and the inlet valve is opened and closed 3 times again and expects to get enough pressure. If the required pressure is not obtained again, System will enter Alarm Mode for 10 minutes. If this situation is repeated 20 times, the system will be stopped completely. Low pressure switch led flashes and bip, the alarm led on the control panel lights up continuously.???

4.1.3 System Restart

System restart; means that restarting of the system after stand-by phase reasons got removed. System will start to work again as explained at the section of 4.1.1 System Operation. The situations which make the system start again are below:

1. By decreasing permeate water level and not being full of permeate water tank
2. Finishing of pre-treatment backwash
3. Refilling of raw water tank
4. Except for them, cutting of signal comes from external connection which causes system stop

4.1.4 System Stop

System just stops when operator or responsible staff gives a stop command. When the system is stopped;

High pressure pump and dosage pump (if it exists) stop at the same time and the inlet valve will be closed after 3 seconds and the feed pump will be stopped. If the operator does not give start command, the system will never work. If the system waits for a long time, the explanation at the section of 7.2.2 Decommissioning must be applied.

4.1.5 Stopping the System due to Malfunction

If there is a malfunction, system will stop. This malfunction is showed both audible and visual warnings. The device should be worked again by solving the problem with operator and resetting the device. The factors which cause system stop due to the malfunction are below:

1. After the signals which come from low pressure and high pressure switches.[4]
2. Giving low level of chemicals in chemical tank.
3. When there exist electrical or mechanical faults except for the others.

4.1.6 Stopping the System with the Emergency Stop Button

In case of emergency situations, emergency stop buttons on the control panel must be used to stop the system. When the system stops by the emergency stop button, the system will stop completely and will switch to the alarm mode. For restarting of the system, emergency stop button has to be released and alarm must be reseted.

4. After the low pressure or high pressure alarm, the system will run automatically every 10 minutes to check whether the specified alarms are gone, if there is no alarm, it will continue to operate.

4.2. Control panel

An image of control panel is shown below:

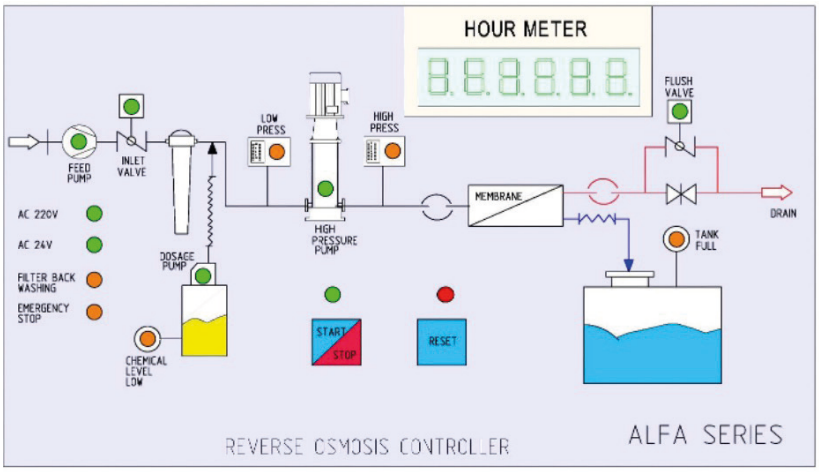

Figure 4-1: Standard Pallas Control Panel Mimic Diagram

Operation of the system can be seen by help of leds on the control panel. Continuous lighting of LED lights on the mimic diagram is considered normal operation. If any led of high pressure pump switch, chemical tank low level switch or any external switch is flashing, there will be a problem about the switch, its led flashes. Also, for this situation, there are audible warnings and red led on led panel flashes continously. In this situation, after repairing the fault, the reset button is pressed for 3-4 seconds and it is reseted and the system continues to normal operation.

4.2.1 Signs on the Control Panel and Their Meanings

The meaning of signs on the mimic diagram is explained at the below.

WRITTEN ON THE PANEL	MEANING	EXPLANATION
AC 220V	ALTERNATIVE CURRENT 220V	Feed, Dosage and High Pressure Pump Works with 220 V AC voltage. If the led of 220 V is on, there is 220 V on the system. If not, there is not 220 V on the system.
AC 24V	ALTERNATIVE CURRENT 24V	The system operates with 24V AC Voltage from Autoflush relays with inlet valves on board. If the led of 24V is on, there is 24V. If not, there is not 24V on the system.
FILTER BACK CLEANING	BACKWASHING IN FILTER	The Pre Treatment Filter Led warns with only flashes, it means that filter is in cleaning. No audible warning is given. When the backwash of filters finished, the system was reactivated as explained at the section of S 4.1.1 System Operation.
EMERGENCY STOP	EMERGENCY STOPPING	It means that the emergency stop button is pressed.
START	STARTING THE SYSTEM	It is used to restart the system. If the led of START on this button burns, it means that system is working. If it is not, the system is not working.
ALARM	ALARM	If there is a fault due to the equipment on the electronic card, led is on. Fault is reseted by the help of Reset Button after controlling the fault and repairing it.
RESET	RESET	It is used to reset the incoming.
FEED PUMP	FEED PUMP	If the led is burning, it means that the feed pump works.
INLET VALVE	INLET VALVE	If the led belongs to this valve, burns, it means that the valve is open.

Table 4-1: Standard Pallas Control Panel Mimic Diagram Explanation Table1

WRITTEN ON THE PANEL	MEANING	EXPLANATION
LOW PRESS	LOW PRESSURE	It shows that the pressure before the high pressure pump is lower than the set value and indicator led flashes.
HIGH PRESSURE PUMP	HIGH PRESSURE PUMP	It shows that a high pressure pump works and led lights as long as the pump is running.
HIGH PRESS	HIGH PRESSURE	It shows that the pressure after high pressure pump is higher than the set value.
DOSAGE PUMP	DOSAGE PUMP	Led lights if the dosage pump works.
CHEMICAL LEVEL LOW	CHEMICAL LEVEL LOW	Led turns on when the level of chemicals in a chemical tank and led does not stop until a chemical supplement is added to the tank.
TANK FULL	TANK FULL	When the permeate water tank is full, the led will light on. When the permeate water goes below the upper level, the led turns off.
FLUSH VALVE	FLUSH VALVE	When the autoflush valve worked, led turns on. When this valve Works, the system flushes and after the autoflush finishes and the valve is closed, the led turns off.
HOUR METER	TIMER	When the high pressure pump starts to operate, the 6-digit counter on the LED panel starts to work, and it monitors the pump's operation time. When the pump stops, it stops on the counter. The operation time of the pump progresses in hours. For the case of power outage, the operation time is stored in hours and minutes, when the power comes back, the operation time goes on in hours and minutes.

Table 4-2: Standard Pallas Control Panel Mimic Diagram Explanation Table 2

4.2.2 Settings

There is just one parameter to adjust for the Standard Pallas Panel. This adjustment is the duration for Autoflush, activation and Duty Cycle. The remaining parameters are predefined on the card by the ESLI Automation Department and can not be changed by the customers.

There are 2 five DIP switches on the Pallas Card inside the Control Panel. The switch is called as SW1 is used to adjust the operation time of DIP Switch Autoflush, SW2 is used to adjust the waiting time of DIP Switch.

Adjusted time according to key position is shown below as a table.

SW1 – TO ADJUST THE AUTOFLUSH OPERATION TIME					
TIME (SEC)	**1**	**2**	**3**	**4**	**5**
10	OFF	OFF	OFF	OFF	OFF
20	**ON**	OFF	OFF	OFF	OFF
30	OFF	**ON**	OFF	OFF	OFF
40	OFF	OFF	**ON**	OFF	OFF
60	OFF	OFF	OFF	**ON**	OFF
120	OFF	OFF	OFF	OFF	**ON**

SW2 – TO ADJUST THE AUTOFLUSH WAITING TIME					
TIME (MIN)	**1**	**2**	**3**	**4**	**5**
30	OFF	OFF	OFF	OFF	OFF
45	**ON**	OFF	OFF	OFF	OFF
60	OFF	**ON**	OFF	OFF	OFF
75	OFF	OFF	**ON**	OFF	OFF
90	OFF	OFF	OFF	**ON**	OFF
120	OFF	OFF	OFF	OFF	**ON**

Table 4-3: DIP Switch Adjustment Tables

Autoflush process is done for 60 seconds in every 60 minutes automatically as a standard. The time can be extended or shortened according to operating condition. If switch position is up, it means ON. If switch position is down, it means OFF. The position of DIP Switches to be adjsuted according to Autoflush times will be as follows.

Using the table on the previous page;

For SW1, 4th switch is up, meaning it is on, Autoflush time will be arranged as 60 seconds;

For SW2, 2nd switch is up, meaning it is on, Autoflush waiting time will be arranged as 60 minutes.

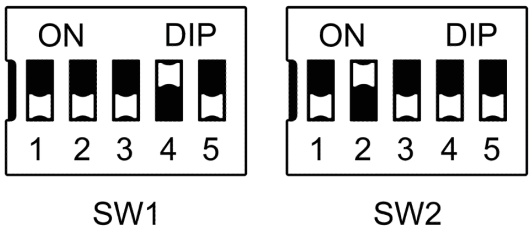

Figure 4-2: Cinque DIP Switch View

5. Transportation storage

- Please protect the system from sliding or toppling, the center of gravity is not in the middle of the system.
- If you want to carry the device by forklift, try not to damage the device by forks of the forklift.
- Please protect from hitting the devices while carrying, otherwise the equipment of the device may be damaged.
- The units must be stored between -4 °C and 40°C and away from direct sunlight and rain.
- Chemicals and membranes must be stored according to appropriate storing conditions which are written in their Material Safety Data Sheets (MSDS).

6. Installation

6.1.1 Cautions Before Installation

- Please read carefully the section 2 2 HEALTH & SAFETY before the installation.
- Connections must be made by qualified staff. It is necessary to take all health and safety precautions before the installation.
- Installation surface must be flat.
- If you want to put the systems on a base, those bases must withstand the weight of the systems.
- Place where the devices will be installed must have an air conditioner. Dosage chemicals must be placed in another room. That room must have an air conditioner so that you prevent the system from chemical vapour.
- Enough capacity drainage must be made for concentrate water and leakage of the system.
- Minimum carrying capacity of the installation place must be 1,5 times of the operating system weight.

6.1.2 Hydraulics Installation

Hydraulics installation of Pallas Series Reverse Osmosis Systems, includes piping operations below:

- Between raw water tank or pretreatment system and feed inlet of reverse osmosis device
- Between concentrate water outlet of reverse osmosis device and drainage line of the concentrate water
- Between permeate water outlet of reverse osmosis device and permeate water tank
- In systems with CIP; between CIP tank and reverse osmosis device, between CIP overflow with CIP discharge and drainage

According to this, you must consider cautions below during hydraulics installation;

1. You must choose fittings equipment which will be used in the installation according to the designed pressure class.
2. Connections of feed water, permeate and drainage lines will be made on the site.
3. You must make raw water inlet connections by choosing appropriate pipe diameter and pressure class.
4. Permeate water lines must be linked to permeate water tanks according to appropriate pipe diameter and pressure class.
5. Back pressure of the permeate water line must be maximum 0,5 bar. If there is a possibility of pressure more than 0,5 bar, you must connect a check valve to that line. If the pressure will be more than 0.5 bar, it is advised to add an extra tank with counter pressure.
6. Permeate water connection pipe diameter, may have larger diameter of permeate water outlet water pipe.
7. If you must put a closing valve on permeate water line, you must put a safety valve before that.
8. Permeate water float switch must be connected to current permeate water tank. The float switch is already connected to the main control panel, if not, please follow the instructions on the wiring diagram.
9. Concentrate water lines must be connected to drainage with appropriate diameter pipe according to appropriate pressure class.
10. If permeate and concentrate lines have lower altitude than osmosis altitude and if there is a possibility of vacuum, you must install a vacuum breaker to those lines.
11. If there are feeding-pump-before-RO and pre-filtration systems, connections must be made by checking appropriate pipe diameter and appropriate pressure class.

6.1.3 Electrical Installation

Electrical installation of Pallas Series Reverse Osmosis System includes electrical operations below;

- Main power connection to control panel
- If they exist, cable connections with socket
- If there is pre-filtration, signal connection in filter cleaning

By this way please pay attention instructions below;

1. You must be sure that the main power switch is closed before main power feeding to the system.
2. Energy feeding line must be maximum 2 meters far from the device. If it will be longer, cable diameter size must be specified again according to new length.
3. Connections which are made to the control panel, must be made according to the scheme inside the panel. You can find standard terminal blocks' tables in section *11 APPENDICES as Appendix 3 – Electrical Diagrams*.
4. Main energy connection;
   - Must be connected to number 1,2 and 3 in X1 terminal blocks on mono phase (230V AC) Pallas panels[5].
   - Must be connected to number 1,2,3,4 and 5 in X1 terminal blocks on three phase (380V AC) Pallas panels[6]. You must make a correct panel phase connection. In 3-phase systems, if you make a wrong connection, Phase Protection Relay gives error. That is explained with details in section *6.2.6 Thermic and Engine Phase Protection Alarm*. Standard electrical scheme is given in section *11 APPENDICES*.
5. You must use a cable lug while connecting cables.
6. If screwing on the panel loosens, heating will occur on energy-existing points. So screwing in panel must not be loosened, they must be tightened properly.
7. If you tighten the screws too much, screw jags will be damaged. So please do not tighten the screws too much.
8. The device is delivered with connected-float-switch. Permeate water level floaters must be left into the permeate water tank. If the permeate water tank is far as float-switch cable can not reach, you can extend cables.
9. If there is a dosing tank, please connect the cables to the main control panel.
10. If there is CIP in the system, you must make socket cable connections of pump and level floater for the chemical cleaning unit.
11. There are bridge connections on terminal blocks of L + 24 VDC (9) and Signal for Filter cleaning (10) inside the terminal block group of X2. If there is pre-filtration in the system and if the osmosis system will be stopped when prefiltration starts cleaning, you must make cleaning-signal-cable-connections by cancelling that bridge connection. Standard electric scheme is given in section *11 APPENDICES*.

5. 1 = Phase, 2= Neutral ve 3 = Earth
6. 1 = R Phase, 2= S Phase, 3 = T Phase, 4 = Neutral ve 5 = Earth

6.1.4 Membrane loading

DO NOT LOAD MEMBRANES TO PRESSURE VESSELS IF YOU WILL NOT COMMISSION AFTER LOADING OF MEMBRANES IN A SHORT TIME. MEMBRANES SHOULD BE KEPT WITH A PROTECTION SOLUTION IN THEIR PACKING AND YOU MUST COMMISSION IN A SHORT TIME AFTER RELEASING FROM THEIR PACKING. YOU MUST ALWAYS MAKE WORK THE MEMBRANES WITH WATER OR YOU MUST ALWAYS KEEP THEM IN THEIR PROTECTION SOLUTION. OTHERWISE THERE IS RISK OF DRYING OF THE MEMBRANES. THAT AFFECTS NEGATIVELY PERFORMANCE OF THE MEMBRANES.

6.1.4.1 Rinsing

1. You must rinse the whole system (pipes, pumps, pressure vessels etc.) with clean water before loading of membranes to pressure vessels. That prevents damaging of membranes by various dirty particles, protection materials and solvent.

6.1.4.2 Preparing of Pressure Vessel

1. Release headings of pressure vessels from both sides.
2. Release all parts (o-rings, membrane head adaptor etc.) of pressure vessel headings, wash with water and put them in a clean place.
3. Check number of o-rings, adaptors and connections of headings and check that they are correct or wrong parts.
4. Clean the dust and other particles which may damage mechanically the membrane surface from inside of the pressure vessel.
5. Cover a sponge ball with a towel or fabric. Submerge that ball to a %50 – 75 glycerine-water solution. Treat the inner side of the pressure vessel with that sponge ball by a rope or PVC pipe.[7] By that way inner walls of pressure vessels are treated by glycerine and you can load membranes easier.
6. In another way; wrap a PVC cork which has smaller diameter than pressure vessel diameter by a cotton fabric[8] until it touches the inner walls of the pressure vessel. Link it to a rope which is longer than the pressure vessel and pull it through the pressure vessel. Inner walls of the pressure vessel will be glycerined that way.
7. Mount the headings on the concentrate water side after cleaning the pressure vessel[9]. Treat the headings of pressure vessels and o-rings in the membrane head adapter with a very thin layer of silicone.

6.1.4.3 Loading of Membranes

1. Ensure that all headings on the concentrate water side are closed.
2. Save; serial numbers of membranes according to correct row inside pressure vessels. This is necessary for probing operation in case of any TDS increase to check out which membrane has problem.
3. Open 1/3 of the packaging of the membrane. By this way, contact of operators with FRP outer surface and protection solution of membranes is reduced.
4. Push the membrane smoothly into the pressure vessel from the feeding side and remove the package while doing this. Avoid contacting membrane protection solutions.
5. Always load membranes from the feeding side.[10] Load membranes in arrow direction (arrow on the membrane) and avoid gliding of membrane o-ring.

7. Try not to damage the surface of the pressure vessel while using a pipe. 8. Submerged to %50 – 75 glycerine-water solution.
9. Mount the headings absolutely properly to prevent gliding of the heading gasket. 10. Feeding sides of all membranes in the system may be different.

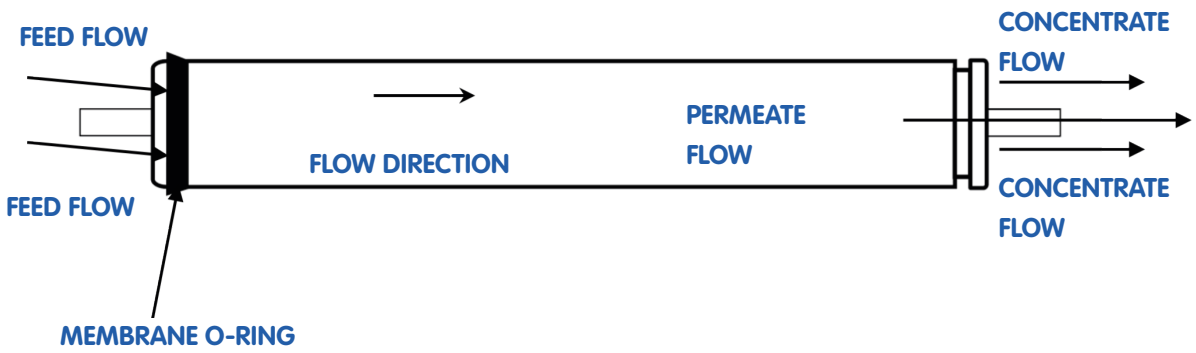

6. Treat membrane o-ring with glycerine solution or silicone and push until it touches to other side heading of membrane vessel.

7. After loading all membranes, mount headings on the feeding side.[11] Before mounting, lubricate the case cover and o-rings on the membrane cover adapter with a very thin layer of silicone.

6.1.5 Disassembly

If it is necessary to shut down or replace the system because of any reason, disassemble very carefully the system by following below steps:

1. Shut down electricity power from the main panel.
2. Cut electricity power which comes to the main panel and release electricity feeding cables inside the panel.
3. Close completely inlet and outlet valves to isolate the system.
4. Remove dosage hoses in the dosage system (if exists).
5. Disassemble electricity power of dosage pumps (if exists) and release them from the panel.
6. If there are immobilizing screws on the chassis frame, disassemble them and make it movable.
7. Remove pressure vessel headings and release membranes. Preserve membranes in regarding membrane protection solution.
8. If the system will be replaced, do it by paying attention to the center of gravity by using an appropriate crane or forklift.
9. Disassembled equipment and lines can be mounted again by following the same assembly steps.

11. Mount very straightly the headings to prevent gliding of the heading gasket.

7. COMMISSIONING

7.1 CAUTIONS BEFORE COMMISSIONING

Read and apply carefully below instructions before commissioning of the assembled system.

- Check all mechanical and electrical connections.
- You may need a pre-treatment system according to raw water quality which feeds the RO system. There may be filtration, softening or etc. systems in pre-treatment. Also you can bring the water quality to intended parameters by chemical dosage. If there is pre-treatment, the reverse osmosis device should be stopped by receiving a signal from the pre-treatment during cleaning/backwashing of pre-treatment.[12]
- Solve problems of pre-treatment systems earlier. Ensure that they work properly without any problem.
- Check convenience of pipes and fittings according to the technical structure of the system.
- Check number and assembly of dosage systems (if exist); connections of dosage systems between them and electrical panels. Check also the convenience of dosage solution.
- Check electrical connections of level floators. Ensure that signals which come to the panel are correct or not.
- Check the cable connections and the mounted instruments.
- Check that electrical feedings of actuator or solenoid valves are made or not.
- Ensure that the air vent valve of the cartridge filter works or not. But be careful while checking out this valve. If you already fed water to the system, pressurized water may squirt from here.
- Check numbers of cartridges on cartridge filter and convenience of assembly.
- Check cable connections of low and high pressure switches, also check convenience of set values.
- Check electrical feedings of pumps and ensure that electrical feedings are correct. Please also check if the pump rotation is correct.
- Ensure that there is no free chlorine, suspended solids and turbidity in water which is fed to RO unit.
- Check that all manual and automatic valves are in the right position.
- If necessary, check the level of the dosing tanks and make sure that the chemicals are not degenerated.
- Check that chemical dosage units are ready to work and their dosage settings are convenient or not.
- Check directions of all check-valves including permeate water check-valves.
- Check that engine connections (star or triangle) are correct or wrong according to drawings on the inner surface of caps.

7.2 COMMISSIONING STEPS

- Commissioning can be done in necessity by authorized department of ESLİ after assembly and completing controls before commissioning. Also if it is necessary supervisorship service can be provided by ESLİ.
- Analyze raw water and check that results are in standard design limits or not. If one of the results is not in those limits, please contact the ESLİ Technical Service Department before raw water feeding to the system.
- Pay attention that raw water is softened. If the raw water is not softened, remember that antiscalant dosage must be done and contact our Technical Service Department for appropriate dosage.
- Ensure that enough flow and pressure is provided to the system.
- Load membranes like explanation in section 5.2.4.3 Loading of Membranes
- Bring ‘main power switch’ to 1 position on the left side of the panel.
- Open completely concentrated water valve.
- Switch the high pressure setting valve to “half-open position”.
- If there is alarm in the system, check necessary controls. You can check out section 8 TROUBLESHOOT.
- Discharge air which may exist in the system by air-discharging-valve on the cartridge filter, when the system works.

12. If entering pre-treatment units to cleaning/backwash phase does not affect the RO feeding flow too much (for example; if there are more than one filters in pre-treatment and if you are sure that pre-treatment system provides enough flow rate to RO in cleaning/backwash phase), the RO system can continue to produce water without going into stand-by mode.

- Set operating parameters as designed with the valves for concentrate, recirculation and permeate.
- If flow is high, you can decrease it by reducing high pressure setting valve. If the flow is low, you can increase it by opening high pressure setting valve.
- Check permeate water conductivity by a conductivity meter on the system. Conductivity value may be high in the first 30 minutes. Please consider the value after first 30 minutes as real value.
- Check that manometers, flowmeters, pressure switches and other equipment work appropriate.
- Check that dosage pumps (if they exist) make suction or do not. Control the dosing pumps with a measurement cup if the dosage is correct. Discharge air which may exist by air-discharging-valve.
- Check that level floaters play alarm or do not.
- Observe opening and closing conditions of electrical actuated valves (if exist) and ensure that they open and close in the right time.
- Check that low pressure switch stops the system in adjusted time. Please adjust it to minimum 2 bar. You can find how to adjust pressure switches in section 6.3 ADJUSTMENT OF LOW AND HIGH PRESSURE SWITCHES.
- Check that high pressure switch stops the system in adjusted time. The adjusted pressure must be approximately 1 bar higher than high pressure pump outlet pressure.
- Check that there is abnormal sound, vibration etc. or there is not while working on pumps.
- Check that electrical motors of pumps are overheated or not.
- Commissioning values must be written on data log sheet. This form is identification of the system. It must be filled daily to keep a record of any change. You can find an example of that sheet in section 11 APPENDICES.

7.2.1 Low Pressure Alarm

If the feed water of the system is not enough, the system stops by giving a low pressure alarm. Possible reasons of this situation are;

- 5-micron cartridge filter may be congested at the start of the system.
- Raw water feed pumps may not be working.
- By any reason, enough water may not be coming from pre-treatment.
- Low pressure switches may be out of order.
- Low pressure switch connections may be wrong. Connections must be in terminal numbers of 1 and 4 on the pressure switch.[13]
- One of the valves may be closed in the system feeding the water line.
- Direction of the entry valve may be wrong.
- Low pressure set value may be wrong.

13. You can find pressure switch wiring diagram in section 6.3 ADJUSTMENT OF LOW AND HIGH PRESSURE SWITCHES.
14. You can find pressure switch wiring diagram in section 6.3 ADJUSTMENT OF LOW AND HIGH PRESSURE SWITCHES.

7.2.2 High Pressure Alarm

If pressure in the system is higher than the one which is adjusted, the system stops by giving a high pressure alarm. Possible reasons of this situation are;

- If there are old membranes in the vessel, the membranes may be congested and they need chemical cleaning. If chemical cleaning does not work, membranes must be changed to new ones.
- Concentrate water lines may be congested.
- High pressure switches may be out of order.
- High pressure switch connections may be made wrong. Connections must be in terminal numbers of 1 and 2 on the pressure switch.[14]

7.2.3 AC 220V Alarm

- If the 'AC 220 V' lamp is not green on the flow diagram (main control panel) that means that there is a problem with the voltage, please check the glass fuse (2A) on the electronic card (inside the main control panel)
- Ensure that the fuse is open inside the panel.
- Check the main energy feed.

7.2.4 AC 24V Alarm

- If 'AC 24 V lamp' is not green, that means 24 Volt does not come to the system. Check that there is 220 Volt on entry to the transformer in the panel and there is 24 Volt AC exit from the transformer in the panel.
- Check cable connections.

7.2.5 Chemical Tank Low Level Alarm

- If there is a dosage pump in your system, dosage tank low level cables must be connected to regarding terminal on the dosage pump. Otherwise the chemical tank plays a low level signal.
- If there is no dosage pump in your system, number 7 and 8 in X2 terminal block are bridged in standard manufacturing. Check bridged cables.
- For chemical low level: the system is delivered with a bridge circuit, first remove the existing bridge circuit and connect the sensor of your tank to the same connection point.

7.2.6 Thermic and Engine Phase Protection Alarm[15]

In 3 phase systems, engine direction and phase row are adjusted in standard manufacturing. When entry phase connection is made, led on the engine phase protection relay must light green. If it is necessary, phase connection direction must be changed and the correct order must be provided. Thermic protection value must be set on the appropriate current according the motor label. If FAILURE led lamp lights, there are 2 possible reasons:

1. Phase row of panel entry is not correct. Row connection must be checked.
2. Engine protection thermic is not open, it must be opened.

15. It is only used in 3-phase systems.

7.3 ADJUSTMENT OF LOW AND HIGH PRESSURE SWITCHES

1. Remove the screw (1) on the switch.
2. Adjust DIFF (4) by straight screwdriver (2), adjust RANGE (5) by fillister head screwdriver (3).

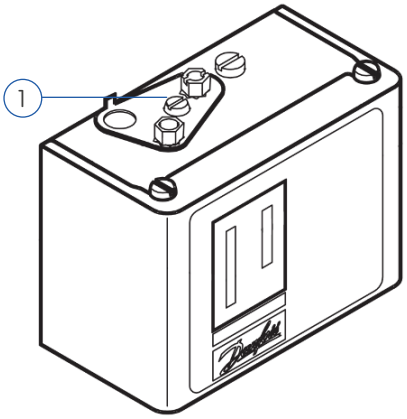

Figure 6-1: Perspective View of Pressure Switch

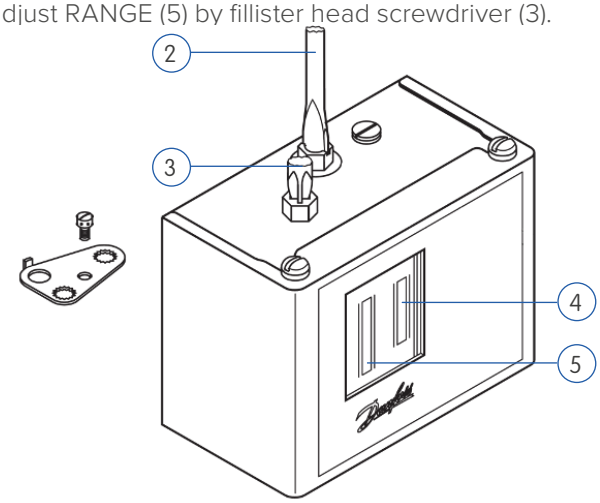

Figure 6-2: Adjustment of Pressure Switch

3. Low level switch stops the system when System pressure ≤Range-Diff
   For example; If Range = 3 bar and Diff = 1 bar, when system pressure decreases to under 2 bar or smaller, low level switch stops the whole system for safety. Again; Range = 4 bar and Diff = 2 bar, when system pressure decreases 2 bar or smaller, low level switch stops the whole system for safety. If you set it as 'Diff is bigger than Range', the system never stops because of low pressure.

4. High pressure switch stops when System Pressure ≥Range+Diff
   For example; If Range = 8 bar and Diff = 2 bar, when system pressure increases to 10 bar or higher, high level switch stops the whole system for safety. Again; Range = 9 bar and Diff = 1 bar, when system pressure increases to 10 bar or higher, high level switch stops the whole system for safety.

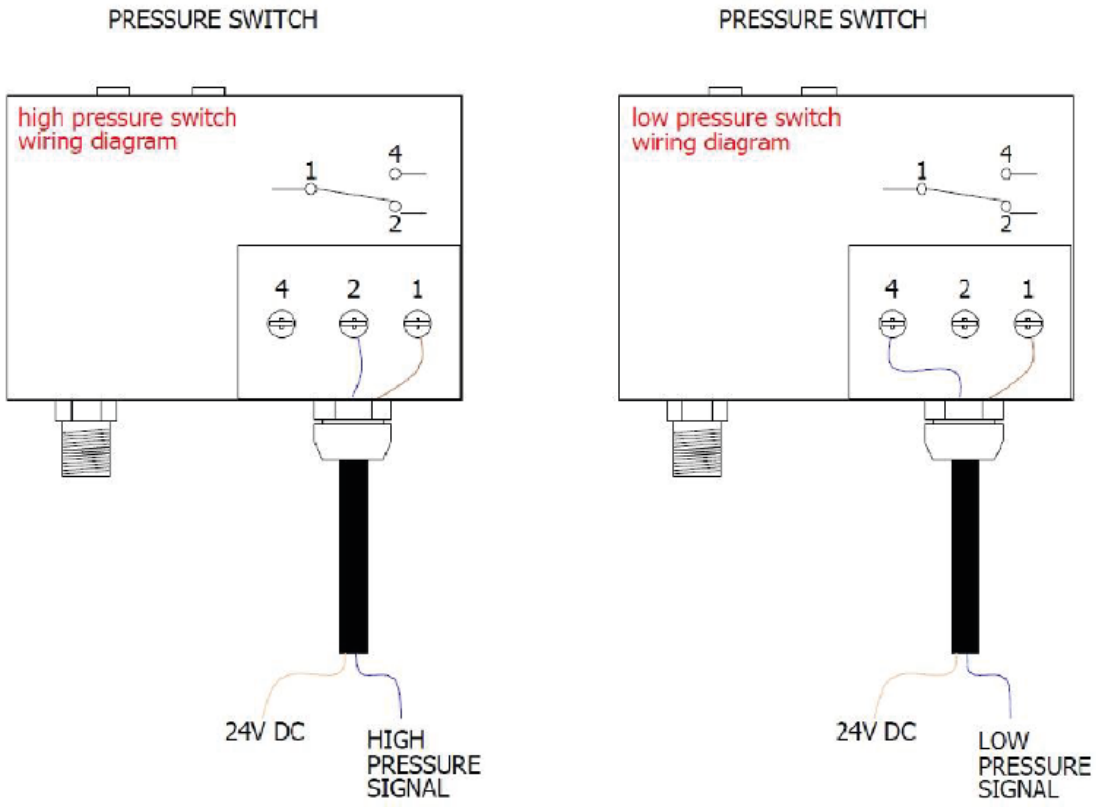

7.4 ADJUSTMENT OF CONDUCTIVITY METER

Conductivity meter which exists in Pallas Series Reverse Osmosis systems, has a view like below figure. The view may differ a little because of improvements and updates.

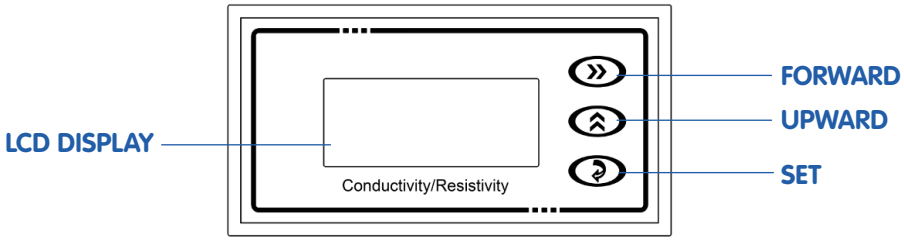

Figure 6-3: Standard Conductivity Meter Controller

When the system is fed by power, on LCD display; You can switch between conductivity and temperature by pressing the UPWARD key. You can switch between ppm and µs/cm units by pressing SET key.

7.4.1 Adjustment of Conductivity Meter K-Factor

1. When the device is on the conductivity meter measuring screen, press and hold the SET key for 3 seconds to go to the Settings page.
2. See flashing of 1.000 number on screen.[16] Press the SET key again. See flashing of only 1 digit. Choose a digit which you want to change by pressing FORWARD and bring the value to K-factor (which is written on the conductivity probe) by pressing UPWARD.
3. Press the SET button to confirm when you enter the value on the conductivity probe.

7.4.2 Adjustment of Conductivity Measure Unit

1. When the device is on conductivity measurement screen, press and hold SET button for 3 seconds to go to Settings page.
2. See flashing of 1.000 number on screen[17] press the SET button two more times. When the word 'UNIT' is shown on screen, choose ppm or µs/cm by using the UPWARD button.
3. Press SET button to confirm conductivity measurement unit.

7.4.3 Adjustment of Conductivity Meter Set Values

1. Press and hold the SET button for 3 seconds when you are at the conductivity measuring screen to go to the Settings page.
2. See flashing of 1.000 number on screen.
3. Press the SET button 3 more times. See Hi word above number on the screen. This word means 'High'. If the conductivity value which passes through the probe is higher than the number on the screen, the system plays 'Conductivity High Alarm'.
4. Choose a digit which you want to change by pressing the FORWARD button and enter the conductivity value which you want the system to play as an alarm by pressing UPWARD.
4. Press the SET button. See Lo word on screen. This word Lo means 'low'. If the conductivity value which passes through the probe is lower than the number on the screen, the system plays 'Conductivity Low Alarm'.
6. Choose a digit which you want to change by pressing FORWARD and enter the conductivity value which you want the system to play alarm by pressing UPWARD.
7. Press SET button to confirm chosen conductivity unit.

16. If the K-factor of the device had been changed before, you will see a changed K-factor instead of 1.000.
17. If the K-factor of the device had been changed before, you will see a changed K-factor instead of 1.000.

8. OPERATION & MAINTENANCE

8.1 OPERATION

The system must be properly operated based on warnings and information written in the user manual. Although the system is fully automatic, there will be situations where operator intervention is required. For this reason, it is important to understand the operation of the system well and to make conscious interventions.

The operator must daily fill data log sheet given in 11 APPENDICES section and be able to make comments by comparing with the previous data. If there are big differences between the membrane inlet pressure value recorded the day before and the membrane inlet pressure value on next day, the reason should be investigated. Or, if permeate (product) water conductivity increases gradually in one week, this situation should be analyzed and investigated to find the reason. Therefore, the more conscious and knowledgeable person operating the plant is, the longer life of the RO device will be. Conditions that require operator intervention are listed below.

1. If there is an alarm on the system, it must be checked and solved the reason of alarm. Then the system can be restarted.
2. In case of water leakage on fittings or installation line, it must be eliminated and the system must be operated again.
3. Stopping or starting the system for any reason,
4. Chemical cleaning of membranes,
5. To protect the membranes during prolonged pauses,
6. Checking the level in chemical tanks and making chemical supplements when necessary,
7. Apart from these, in case of any problem in the system, to contact with ESLİ Technical Service Department.

8.2 MAINTENANCE

8.2.1 Periodical Maintenance

Most of the conditions required for maintenance in the system will be detected by the current alarm mechanisms. However, when an alarm occurs; Since it will require more urgent and expensive interventions, it will be better to routinely check the problems and possible main reasons are given below, without waiting for the alarm to occur. It is recommended to prepare a form regarding the maintenance practices and to keep a record of notes regarding the maintenance performed in this form. Frequently encountered problems and maintenance work to be done to prevent them can be determined more easily with the help of this form.

8.2.1.1 Daily Maintenance

- Check the static and dynamic elements on the plant.
- Check for water leaks and if there is, fix them. Write non-repaired leaks and errors in the shift book.
- Take air of the dosing pumps (if they exist) and check that they are pushing desired amount of chemical.
- Check cartridge filter inlet and outlet pressures. If the pressure difference between inlet and outlet exceeds 0,8 bar, replace the cartridge filter.
- Check permeate water and concentrate water flow rate. If there is a change according to commissioning values, investigate the causes.
- Check the pressures on the manometers in the relevant parts of the system. If there is a change in pressures, investigate the causes.
- Check the RO inlet water temperature.
- Check the RO system efficiency.
- Check chemical consumption (if there is chemical dosage).

8.2.1.2 Weekly Maintenance

- Repeat the procedures in daily care.
- Check the fittings. If there are leaks, fix them.
- Fill dosage tanks (if there is).
- Check if the inside of chemical storage tanks is clean or not.
- Make sure that system data log is being filled.
- Check that pumps and valves are working properly.
- Check the RO operating efficiency.
- Clean the equipment on the system.

8.2.1.3 Monthly Maintenance

- Repeat the procedures in Daily and Weekly Care.
- Blow compressed air to clean the electrical panels.
- Check calibrations of pH, ORP and conductivity analyzers (if there is). If calibrations are not good, calibrate them.
- Perform manometer pressure tests.
- Check the filter for signs of contamination by removing the cartridge filter.
- Check for signs of contamination by removing the membrane caps.
- Perform functional tests of the low and high pressure switches.
- Perform functional tests of the level switch or level switches.
- Check pump current values, flow rate, pressure, sound and vibration.
- Check that all valves in the system are fully open and closed.

8.2.1.4 Yearly Maintenance

- Repeat the process in Weekly and Monthly Maintenance.
- Check the electrical connection and clean (if necessary)Replace defective parts.
- Perform a general cleaning.
- Fixing and leveling equipment; should be checked according to the equipment manufacturers' instructions. This should be done especially for pumps and electric motors.
- Lubricant and bearing checks of the pumps should be made, if necessary, they should be changed and / or added.
- Actuator and manual valves should be disassembled, their seals and shafts should be checked and replaced if necessary.
- If necessary, membranes should be cleaned by chemical cleaning.
- Annual system data should be reviewed and if necessary, it should be done again considering the system efficiency performance losses.

8.2.2 Decommissioning

If the system needs to be stopped for any reason, the Decommissioning Procedure must be followed. Otherwise, bacteriological growth will be observed in the pores of the membranes and membrane structure shall be damaged.

The CIP system must be in place during the decommissioning process. If you do not have a CIP system in the system, you can do this by installing an external CIP system.

When decommissioning, the system needs to be filled with conservative solution, relevant data should be logged. If available, notes about different practices or observations are recorded in the table. The schedule can be easily seen near the system and is hung in a suitable place.

8.2.2.1 Deactivation of the System During Short Time Stop

Membranes must be preserved according to the Short Term Decommissioning Procedure for stops longer than 24 hours and up to 96 hours.

Short Term Decommissioning Procedure;

1. By rinsing with RO product water, the air in the vessel and membrane is thrown out together with the dirt in the membrane.
2. When the vessels become full of water, all valves are turned off.
3. Every 12 hours I. and II. steps are repeated.

8.2.2.2 System Deactivation During Long Time Stop

For stoppages longer than 4 days, membranes must be protected according to the Long Term Decommissioning Procedure.

Long Term Decommissioning Procedure;

1. System; By rinsing with RO product water, the air inside the vessels and membrane is thrown out together with the dirt in the membrane.
2. If there is a CIP system provided by ESLİ, the system is placed in Chemical Cleaning Position.
3. Preservation Solution should be prepared in CIP tank. Sodium Metabisulfite is used as a preservation solution. The preservation solution concentration should be prepared as 2% by weight. For example; If approximately 22 kg of 95% powder SMBS chemical is added to 1000 liters of RO product water, a 2% SMBS solution by weight is prepared.
4. The solution in the CIP Tank is mixed until it becomes a homogeneous solution.
5. Chemical cleaning is started and the system is operated until the solution in the CIP tank is finished.
6. When the solution is finished, chemical cleaning is stopped and all valves in the system are closed and the solution is cut off from contact with air. When the SMBS solution comes into contact with air (oxygen), it will oxidize the SMBS to sulphate, lowering the pH. Therefore, the pH should be checked periodically. If the pH falls below 3, the protective solution must be renewed.
7. Ambient temperature should not be below 0 C and above 40 C.
8. Step numbers I, II, III, IV, V and VI should be repeated;
   - In every 15 days if ambient temperature is more than 27 C
   - In every 30 days if ambient temperature is less than 27 C.

8.2.2.3 Preservative Solution Rinse and System Commissioning

The protective solution must be rinsed off when the system which the Long Term Disabling Procedure has been applied is desired to be reactivated. This is done by following the steps below and the system can be recommissioned again.

1. All closed valves should be fully opened and the protective solution should be drained completely.
2. Power is supplied to the main board.
3. The high pressure pump is deactivated by opening the thermal protection relay of the pump in the panel.
4. The system is operated without a high pressure pump and rinsed at low pressure.
5. Air is taken with the help of the air outlet valve on the cartridge filter.
6. Check that chemical solution was rinsed completely or not by measuring samples taken from concentrate line. After you ensure that chemical solution was rinsed completely, stop the system.
7. Turn of the high pressure pump thermal protection relay. By this way, the pump will be operable again.
8. You can reactivate the system as described in section 6.2 COMMISSIONING STEPS.

8.2.3 Chemical Cleaning

The surface of RO membranes can become contaminated over time with suspended solids, colloids and precipitates. The main purpose of pretreatment before RO is to minimize such contamination that may accumulate on the membrane surface. If the membranes are operated under the best operating conditions (product water flow, pressure, efficiency and pH value), the membranes will become less contaminated.

If the SDI value obtained from the pre-treatment is high[18], the membranes will be clogged cause of pollutants. Big changes in raw water characteristics and wrong operation conditions may also cause cloggings on membranes.

During normal operation, RO membranes may be clogged by dissolved or suspended solids in water by time. Examples of membrane pollutions are given below:

- Calcium Carbonate Precipitate
- Calcium, Barium and Strontium Sulphate Precipitate
- Metal Oxide Precipitation (Iron, Manganese, Copper, Nickel, Aluminum etc.)
- Polymerized Silica Precipitation
- Blockage Caused by Inorganic Colloids
- Blockage due to Inorganic / Organic Colloid Mixture
- Clogging Caused by Natural Organic Materials
- Clogging Caused by Man-Made Organic Materials (Ex; Antiscalant)
- Biological Occlusion (Bacteria, Algae, Mold, Fungus)

Pollution formation; depends on many factors such as the quality of the feed water and system efficiency. Typically, contamination progresses slowly and can damage the membrane if not intervened early. Chemical cleaning process is performed as routine maintenance before prolonged downtime or when clogging of membranes is observed.



Membranes should always be operated in good conditions to avoid clogging by the contaminants liste above. Permissible pollution on the membrane is like below:

- If the decrease in product water flow is less than 10%
- If the decrease in product water quality is less than 10%
- If the pressure loss between feed and waste is less than 15%

18. Even if SDI value does not exceed maximum value for RO inlet water, clogging is possible on membranes in long term cause of pollutants.

Applying the Chemical Cleaning process before reaching these values will provide good operating conditions for the membranes. If the values obtained after cleaning is same or close to start-up values, it shows that the chemical washing got effective.

Some operating parameters have fixed values: product water flow rate, product water counter pressure, system recovery, temperature and inlet water conductivity. If these values are changing, first they need to be stabilized and after that they should be compared with start-up values to see if the membrane is clogging.

Routine control of the plant is important for early detection of membrane clogging. Performance changes due to the nature of the pollutant are shown in Table 7-1: Membrane Pollution Diagnostic Table.

RO Chemical cleaning frequency varies according to every plant's situation. The frequency of cleaning usually varies between 3 months and 12 months. If there is more than one chemical cleaning needs to be performed, the pre-treatment should be redesigned to reduce the frequency of chemical cleaning. If there is a need for cleaning every three months, the functioning of the current system should be reviewed.

Membranes should be washed before heavy contamination occurs. Heavy contamination will make it difficult for the wash solution to penetrate deep into the contaminant and at the same time it will be very difficult to clean the contamination from the system. Therefore, the chemical cleaning efficiency will decrease and it will not be possible for the membrane to regain its former performance. When the membrane performance drops by 30% - 50%, it is impossible to return the membrane to its previous performance.

Systems are often washed with low and high pH solutions. The reason for that is clogging of membranes by pollutants in different characteristics even if it changes from plant to plant.

POSSIBLE CAUSE	POSSIBLE LOCATION		PRESSURE DROP	FEED PRESSURE	CONDUCTIVITY
METAL OXIDE[19]	1. STAGE	INITIAL MEMBRANES			
COLLOIDAL[20]	1. STAGE	INITIAL MEMBRANES			
MINERAL[21]	LAST STAGE	LAST MEMBRANES			
POLYMERIZED SILICA	LAST STAGE	LAST MEMBRANES			
BIOLOGIC	IN ALL STAGE	INITIAL MEMBRANES			
ORGANIC[22]	IN ALL STAGES				
ANTISCALANT	AT MOST AT 2. STAGE				
OXIDANT[23]	AT MOST AT 1. STAGE				
HYDROLYSIS[24]	IN ALL STAGES				
CORROSION[25]	AT MOST AT 1. STAGE				
O-RING LEAKAGE[26]	RANDOM	GENERALLY FEED ADAPTOR			

Table 7-1: Membrane Scaling Diagnostic

19. For example; Fe, Mn, Cu, Ni, Zn
20. Organic and / or inorganic complexes
21. For example; Ca, Mg, Ba, Sr
22. Dissolved organic matter
23 For example; Cl2 , ozone, KMnO4
24 pH is out of range
25 Carbon particles etc.
26 In membrane cover or intermediate adapter

8.2.3.1 Membrane Scaling Types

1 Calcium Carbonate Scaling

Generally, reason of calcium carbonate precipitation is mistakes during antiscalant/dispersant control or pH control by acid dosage. Early detected calcium carbonate can be solved by keeping RO feed water pH level around 3-5 pH for 1-2 hours. To remove more resistant calcium carbonate precipitate, you need to use low pH chemicals for cleaning such as citric acid.

2 Calcium, Barium & Strontium Sulphate Scaling

Removing sulphate precipitate is more difficult than calcium carbonate precipitate. It is happened cause of excessive dosage of antiscalant/dispersant and sulphuric acid. Besides, preventing barium and strontium sulphate precipitate is more difficult. For this reason, you need to take special precautions.

3 Calcium Phosphate Scaling

High-phosphate ratio is usually found in domestic wastewater and dirty water. You need to use acidic chemicals to prevent calcium phosphate precipitation.

4 Metal Oxide/Hydroxide Scaling

Iron, zinc, manganese, copper and aluminum cause metal oxide or metal hydroxide precipitate by oxidizing. Oxidizing agents are for example air, ozone, chlorine and potassium permanganate.

5 Polymerized silica layers

Dissolved silica in water gets polymerized and precipitates onto membrane. It is very difficult to remove silica material by conventional chemicals. For this reason, chemicals such as ammonium biflouride is used for that. But storage of these kind of chemicals is dangerous and they may damage equipment.

6 Colloidal Scaling

Colloids are substances that are composed of inorganic or combined-inorganic-organic particles that cannot be sedimented by gravity. Colloidal substances usually contain one or more of iron, aluminum, silica, sulfur or organic substances.

7 Dissolved Organic Matter (DOM) Organic Scaling

Natural organic substances (DOM), which can be found in all surface and groundwater, even rainwater, are formed as a result of complex biotic and abiotic reactions. The chemistry of these organic pollutants is very complex. Its major organic component is humic acid or fulvic acid. Dissolved DOM can be absorbed into the membrane surface, causing the membranes to clog quickly. When absorption occurs, scaling slowly begins to form in the form of a gel or sludge.

8 Microbiological Scaling

If there is congestion on the feed side due to organic-based pollutants such as bacteria, fungi, mold etc., these pollutants are very difficult to remove. This blockage on the feed side prevents the entry and distribution of the washing solution. It is necessary to sterilize not only the RO system but also pretreatments, installations and dead spots to prevent additional pollution.

8.2.3.2 Considerations in the Use and Selection of Cleaning Chemicals

If the system requires chemical cleaning, the following chemicals and their uses should be considered.

- Chemicals with low pH are used primarily to remove the precipitated minerals. Afterwards, chemicals with high pH should be used to remove organic substances.
- In oil or biological deposits, firstly chemicals with high pH, then chemicals with low pH are used. Some detergent-added cleaning solutions are used as auxiliary substances in the removal of heavy biological and organic residues. EDTA solution can also be used to remove heavy biological and organic residues.
- The cleaning process should be at the recommended temperature in order to increase the life and cleaning efficiency of the membrane.
- In order to increase the life of the membrane, the contact time of the chemical should be chosen as minimum as possible.
- Chemicals used in membrane cleaning should not be left in contact with the membrane for a long time.
- While the sensitive chemical wash pH range is 4 to 10, the strong chemical wash pH range is 2 to 12.
- Cleaning should be done in flow direction of inlet water in order not to damage the membrane. Reverse cleaning procedure can also be applied as a result of heavy contamination of the membranes. For information about this procedure, please contact ESLI Technical Service Department.
- Effective cleaning method in multi-stage reverse osmosis systems is cleaning stage-by-stage with optimum washing velocity.
- After cleaning with detergent added cleaning solutions, the problem of foaming can be eliminated by keeping the pH of the outlet water high during the rinsing process.
- If there is biological precipitation, biocide type chemicals are used in addition to the cleaning process. Application; It is applied immediately after cleaning, weekly or continuously. Care should be taken that the biocide used here must be compatible with the structure of the membrane and does not damage the membrane.
- For safety, make sure that all equipment can withstand the pH, temperature and pressures during chemical cleaning.
- For safety reasons, the chemical addition process should be done slowly to the mixing tanks containing water. Acid and caustic should not be mixed. In addition, the second solution should be added after the first cleaning solution is completely removed from the membrane.
- Minimum cleaning temperature is 21°C

8.2.3.3 Selection of Cleaning Chemical

The chemicals to be used according to the pollution to be removed are listed in the table below.

SCALING SUBSTANCE	SENSITIVE CHEMICAL CLEANING SOLUTION	STRONG CHEMICAL CLEANING SOLUTION
CALCIUM CARBONATE PRECIPITATION	1	4
$CaSO_4$, $BaSO_4$, OR $SrSO_4$, PRECIPITATION	2	4
METAL OXIDE/HYDROXIDES	1	5
INORGANIC COLLOIDAL SCALING	1	4
MIXED INORGANIC/ORGANIC SCALING	2	6
POLYMERIZED SILICA PRECIPITATION	NONE	7
BIOLOGICAL SCALING	2 OR 3	6
DOM ORGANIC SUBSTANCE	2 OR 3	6

Table 7-2: Chemical cleaning Solution Selection Chart

Solution 1:

2% by weight citric acid (C6H8O7) is used as a low pH (target pH 4) cleaning solution. These solutions are used to remove inorganic deposits (calcium carbonate, calcium sulphate, barium sulphate, strontium sulphate) and metal oxides / hydroxides (iron, manganese, nickel, copper and zinc).

Solution 2:

As a high pH (target pH 10) cleaning solution, 2% by weight STPP (sodium tripolyphosphate) (Na5P3O10) and 0.8% by weight Na-EDTA (sodium ethylenediamine tetraacetic acid salt) are used. These solutions are widely used for the removal of calcium sulphate and organic precipitates.

Solution 3:

2% by weight STPP (sodium tripolyphosphate) and 0.25% by weight Na-DDBS (Sodium dodecylbenzene sulfonate salt) (C6H5 (CH2) 12-SO3Na) solutions are used as the high pH cleaning solution (target pH 10). These solutions are used for the removal of high organic precipitates.

Solution 4:

A 0.5% by weight hydrochloric acid (HCl) solution is widely used as a low pH (target pH 4) cleaning solution. This solution is used to remove inorganic deposits (calcium carbonate, calcium sulphate, barium sulphate, strontium sulphate) and metal oxide-hydroxides (iron, manganese, nickel, copper and zinc). HCl solution is more effective than Solution 1.

Solution 5:

1% by weight Na2S2O4 (Sodium hydrosulfite) is used as a low pH (target pH 4 to 6) cleaning solution. They are also effective in removing metal oxide / hydroxides (especially for iron precipitation) and removing small amounts of barium sulphate, calcium sulphate and strontium sulphate. Since this solution has a very strong odor, the environment should be ventilated during cleaning.

Solution 6:

NaOH (caustic) of 0.1% and SDS (sodium dodecyl sulphate) of 0.03% by weight are widely used as a high pH (target pH of 11.5) cleaning solution. Such solutions are used for the removal of organic and biological residues. SDS is detergent and may cause foaming.

Solution 7:

As a high pH (target pH of 11.5) cleaning solution, 0.1% by weight of NaOH (caustic) is used. Such solutions are used for the removal of polymerized silicas.

8.2.3.4 Preparation of w Cleaning Solution

The table below; It contains information during preparation of cleaning solutions described on the previous page. The following chemicals are prepared by adding them into 379 liters of pure water.

CLEANING SOLUTION	CHEMICALS	QUANTITY	PH	TEMPERATURE
1	Citric Acid (%100 powder)	7,7 kg	There is no need for pH adjustment.	40°C
2	STTP (%100 Powder) Na-EDTA (%100 Powder)	7,7kg 3,18 kg	The pH is adjusted to 10 with Sulfuric or Hydrochloric acid.	40°C
3	STTP (%100 Powder) Na-DDBS	7,7 kg 0,1 kg	The pH is adjusted to 10 with Sulfuric or Hydrochloric acid.	40°C
4	HCL Acid (%36 HCL)	1,78 lt	With HCL, the pH is slowly lowered to 2.5, with NaOH, the pH is slowly increased to 2.5.	35°C
5	Sodium Hydrosulfite (%100 Toz)	3,86 kg	There is no need for pH adjustment.	35°C
6	NaOH (%100 Powder) Or (%50 Liquid) SDS	0,38 kg 0,49 lt 0,11 kg	With NaOH, the pH is slowly increased to 11.5, with HCL the pH is slowly lowered to 11.5.	30°C

Table 7-3: Chemical Cleaning Solution Preparation Table

8.2.3.5 Chemical Cleaning Steps

- Before starting the chemical cleaning process, the following warnings should be considered and applied.
- Before using chemicals, be sure to read their MSDS carefully.
- Before starting to wash, make sure that the prepared chemical solutions are well mixed and dissolved.
- It is recommended to rinse the membranes with a clean chlorine-free water (minimum 20 ° C) after chemical cleaning. Product water or deionized water can be used. During the re-commissioning of the system, the product water should be given to the drain until it is ensured that no chemicals come out of the product water.
- During chemical cleaning, the maximum allowed temperature value should not be exceeded. The maximum allowable temperature and pH varies according to the membrane type.

There are 6 steps to be followed in chemical cleaning of membranes;

(1) The cleaning solution is prepared.

(2) The heated cleaning solution is fed into the system with the help of a pump at low flow rate and low pressure. Thus, the process water in the membranes will be thrown out. The pressure must be low enough to make sure that it does not go through the membrane to the product water line.

(3) When the process water is completely discharged from the system; The prepared solution will begin to be ejected from the waste line. Thereupon, the water coming out of the waste and product line will be returned to the CIP tank with the adjustments made in the necessary valves and the temperature stabilization will be observed. The pH of the solution will be measured and pH adjustment will be made if necessary.

(4) The pump is stopped and the solution is allowed to stay in the system. Sometimes a waiting time of 1 hour is enough for the chemical wash to be effective. In case of very heavy pollution, the solutions can be kept in the system for 10-15 hours.

(5) The cleaning solution in the system is rinsed with high flow rate. In this way, the pollutants separated from the membrane surface are rinsed out of the system with high flow rate.

(6) Then purge the solution present in the system by rinsing the system with product water or deionized water. Minimum rinsing temperature is 21 C.

8.2.3.6 Tips About Chemical Cleaning

- In multi-stage systems; It is recommended to wash each stage one by one. Because the pollution removed from the first stage proceeds to the second stage, and if there is any, the pollution removed from here proceeds to the next stages and reduces the cleaning efficiency.
- Sediment or clogging of membranes usually occurs as a result of coexistence of impurities. For example, organic, colloidal and biological contamination causes clogging of the membrane. For this reason, the selection of the first cleaning step is very important. Alkaline cleaning is recommended as the first cleaning step. If there is pollution caused by calcium carbonate or iron oxide / hydroxide, the first cleaning should be done with acid.
- Acid solutions often react with silica, organic materials (such as humic acid) and biofilm layers and can affect the performance of the membrane. Sometimes alkaline cleaning after acid cleaning can eliminate this loss of performance, but vigorous chemical cleaning is usually required. If there is colloidal, organic, biological contamination and calcium carbonate precipitation in the system, the contamination is removed by chemical cleaning in two steps. First, alkaline cleaning and then acid cleaning should be done. Organic, colloidal and biological pollution removed after alkaline cleaning will increase the efficiency of acid cleaning.
- Always measure the pH during chemical wash. pH during acid wash; If it rises more than 0.5 ‘unit, acid addition is required. pH when cleaning alkaline; If it drops by more than 0.5 units, caustic addition is required.
- In cases where the solution is kept in the membrane for a long time (in cases where the pollution is heavy), the solution becomes completely saturated and the pollutants can be deposited on the membrane surface again. In addition, there is a temperature drop in the waiting period and the holding process will be less effective. It is necessary to circulate the solution regularly in order to maintain the temperature (the temperature should not drop more than 5 C). If the pH decreases during this process, the pH is adjusted by adding the necessary chemicals.
- If the solution does have turbidity or any kind of pollution, it should be refreshed. The chemical cleaning process is repeated with the freshly prepared cleaning solution.
-

9. TROUBLESHOOT

In this section, some minor problems that may occur while using Aqualine Pallas Series Reverse Osmosis devices, possible causes and solutions of these problems are discussed.

You can find possible problem types, possible causes and possible solutions in below three tables. If you cannot solve the problem, please contact to your sales representative for solution.

FAULT	POSSIBLE CAUSES	POSSIBLE SOLUTIONS
EMERGENCY STOP	Thermic breaker turned off	Bring thermic breaker from 0 to 1.
	Phase direction is wrong	Check out phase directions and connect them in correct way.
LOW PRESSURE	Raw water feed pump does not work	Check the raw water feed pump.
	Cartridge filter is blocked	Replace the relevant cartridge filter.
	Cable is loosed	Check the cables.
	Cable is dislodged	
	Water does not come	Make sure that water flows into the system.
	Valve is closed	Check the valves in the system.
	Check Valve is defective	Change the check valve
	Low pressure switch setting incorrect	Adjust pressure switch.
	Low pressure switch is defective	Change pressure switch.
HIGH PRESSURE	Membrane is blocked.	Use a chemical cleaning. If there is no result, replace the membrane with a new one.
	Needle valve over tightened	Adjust the needle valve by controlling the product water flow and high pressure.
	Cable is loosed	Check the cables.
	Cable is dislodged	
	High Pressure Pump Fault	Check the high pressure pump.
	Reject water line is blocked.	Check the concentrate water line.
	High pressure switch setting incorrect	Adjust pressure switch.
	High pressure switch is defective	Change pressure switch.

Table 8-1: Troubleshoot Table 1 / Table 8-2: Troubleshoot Table 2

FAULT	POSSIBLE CAUSES	POSSIBLE SOLUTIONS
CONDUCTIVITY HIGH	Chlorine leakage to the membrane	Change the membrane
	Conductivity meter is out of calibration	Calibrate the conductivity meter.
	Conductivity meter is defective	Change conductivity meter.
	Conductivity meter probe is defective	Change conductivity meter probe.
	Cable at the probe of the conductivity meter is loose	Check the cable
	Membrane is blocked	Use a chemical cleaning. If there is no result, replace the membrane with a new one.
	Needle valve setting incorrect	Adjust the needle valve by controlling the product water flow rate and high pressure.
DOSAGE PUMPS DO NOT WORK	Energy is not coming	Check the energy feeds by cutting the energy of the panel.
	Dosing pump burnt out	Contact your sales representative and replace it with a new one.
	Relay failure	Replace the relay.
	Contactor is out of order	Replace the contactor.
	Dosing pump fuse blown	Replace the dosage pump fuse.
DOSAGE PUMPS DO NOT DISCHARGE	Air not evacuated	Take the air in the line.
	Product water flow rate is high	Clean the suction unit.
	Dosing pump mechanism are blocked	Contact your sales representative and replace it with a new one.
	Discharge point is blocked	Clean the line.
	The hose is punctured	Change the hose
	The hose is dislodged	Check the hose connection points.
SOLUTION IS NOT DECREASING IN THE DOSING TANK	Dosing pumps not discharging	Check the dosing pumps.
VALVE DOES NOT OPEN	Energy is not coming	Check the energy feeds by cutting the energy of the panel.
	Valve coil burnt	Replace the coil with a new one.
	Actuator/solenoid fault	Replace it with a new one.
	Body of valve is defective	Change the valve with a new one.
	Relay fault	Change the relay wit a new one.
	Cable is loose	Check the cables.
	Cable is dislodged	

FAULT	POSSIBLE CAUSES	POSSIBLE SOLUTIONS
CIP TANK OVERFLOWED	CIP tank upper level switch fault	Replace the switch with a new one.
	CIP tank filling valve fault	Replace the valve with a new one.
	Chemical flushing return valve open	Close the valve.
PERMEATE WATER FLOW RATE IS LOW	Membrane is blocked	Use a chemical cleaning. If there is no result, replace the membrane with a new one.
	High Pressure Pump fault	Check the pump. Contact your sales representative and replace it with a new one.
	Needle valve setting fault	Adjust the needle valve by controlling the product water flow rate and high pressure.
	Raw water flow rate is low	Make sure that sufficient water flows into the system.
	There is a leak in the installation	Check the installation. Repair the leak point.
	There is a scaling in the pipes	Replace the blocked lines with a new one.
RO DEVICE DOES NOT ACTIVATE	Power failure problem	Check the phases and voltage from the power line coming from the network.
	Line off in power distribution board	Check the power distribution board.
	Problem with RO control board connection	Check the RO control panel electrical connection.
	RO power switch off	Set the RO power switch to the "on" position.
LOW RO EFFICIENCY	Flow rate adjustment failure	Adjust the flow rates with the regulating valves.
	Water temperature low	Check the water temperature.
	Membrane feeding pressure is low	Adjust the membrane feeding pressure with the high pressure pump regulating valve.
	Membrane is blocked	Use a chemical cleaning. If there is no result, replace the membrane with a new one.
HIGH DIFFERENCES OF INLET OUTLET PRESSURE BETWEEN STAGES	Membranlar is blocked	Use a chemical cleaning. If there is no result, replace the membrane with a new one.

Table 8-2: Troubleshoot Table 2 / Table 8-3: Troubleshoot Table 3 / Table 8-4: Troubleshoot Table 4 / Table 8-5: Troubleshoot Table 5

FAULT	POSSIBLE CAUSES	POSSIBLE SOLUTIONS
HIGH PRESSURE PUMP IN MOTOR PROTECTION	Ampere range not suitable	Check the amperage drawn by the motor. Make the necessary adjustments on the motor protection relay.
		Check the amperes and make sure that there are 3 phases.
	There is overheating	Please contact the Technical Service Department.

10. WARRANTY CONDITIONS

10.1 SYSTEM WARRANTY CONDITIONS

- There is a performance decrease of up to 10% annually in the ion removal efficiency of the membranes of reverse osmosis devices and up to 5% in the total system efficiency.
- The operating conditions and settings that will affect the performance of the system should not be changed without the written approval of ESLİ and / or its authorized services.
- The effect of parameters / conditions which ESLİ and / or its authorized services are not informed about their existence / effects are excluded from this guarantee on performance evaluation.
- The operating data of the system for which guarantee is requested; The system will be out of warranty if the customer cannot provide the full data after commissioning.

10.2 GENERAL WARRANTY CONDITIONS

- All our systems are guaranteed for 2 years against all kinds of fabrication failures. The warranty starts on the invoice date of the systems.
- Under guarantee; Repair of equipment / material that malfunctions due to material, manufacturing and assembly faults is carried out by ESLI and / or its authorized services free of charge within 20 working days at the latest. The time spent in repair is added to the warranty period of the relevant material / equipment.
- Under guarantee; If it is not possible to repair parts that break down due to material, manufacturing and assembly errors, the defective material / equipment is replaced with a new one. Exchange time; 10 working days for domestic supplies after it is determined that the material / equipment cannot be repaired. For international supplies, it depends on the delivery time of the supplier.
- The warranty period of the material / equipment replaced under warranty is limited to the remaining warranty period of the replaced material / equipment.

Table 8-5: Troubleshoot Table 5

10.3 CONDITIONS ASSESSED OUTSIDE OF THE WARRANTY

- Any kind of malfunctioning or damage caused by the change of the characteristics of the feed water which was agreed by both parties during the design of the system.
- Damage to reverse osmosis membranes due to chlorine ingress.
- Using Antiscalant other than the Antiscalant specified by ESLI in the Reverse Osmosis system
- Detection of chemical dosage adjustments made outside the specified values
- Damages and failures that occur as a result of not operating the system as described in the Product Introduction and User Manual and not following the written warnings.
- Damages and failures that may occur due to low or excessive voltage, faulty electrical installation, supply with voltage different from the voltage described in the product introduction and user manual.
- Malfunctions caused by not grounding the power supply line as defined in the product introduction and user manual
- In case the shipment belongs to the customer; hitting, falling etc. damages and malfunctions that may occur due to reasons.
- By companies / persons other than ESLİ and / or its authorized services;
  - Installation of systems
  - Commissioning of systems
  - Intervention to systems
  - Maintenance and service
  - Changing of equipment places and placement
- Loss and theft of equipment and materials used in the system
- Damage or malfunction in devices due to natural disasters, lightning, flood, fire or earthquake.

Pallas®
Alfa

Technical overview

MODEL PALLAS ALFA	140	240	440	540	640
Permeate flow rate (l/h)*	250	500	1000	1250	1500
Max. feedwater TDS (ppm)	2000	3000	3000	3000	3000
Feedwater °C	15° C	15° C	15° C	15° C	15° C
Min. feedwater pressure	2 bar	2 bar	2 bar	2 bar	2 bar
Recovery	75 %	75 %	75 %	75 %	75 %
Recirculation line	Yes	Yes	Yes	Yes	Yes
Auto flush	Yes	Yes	Yes	Yes	Yes
Skid material	SS 304 (not polished)				
Controller	Micro processor				
Pump	Grundfos CM 1-10 (single phase)	Grundfos CM 1-10 (single phase)	Grundfos CM 3-14 (tri phase)	Grundfos CM 3-14 (tri phase)	Grundfos CM 3-14 (tri phase)
Rated voltage - power	220V - 0,67 kW	220V - 0,67 kW	3 x 220/380V - 2,2 kW	3 x 220/380V - 2,2 kW	3 x 220/380V - 2,2 kW
Membranes**	1 x LG BW 4040 UES	2 x LG BW 4040 UES	4 x LG BW 4040 UES	5 x LG BW 4040 UES	6 x LG BW 4040 UES
Flowmeters	3	3	3	3	3
Manometers	3	4	6	5	5
Low pressure switch	Yes (Danfoss) x 1				
High pressure switch	Yes (Danfoss) x 1				
Floater	Yes	Yes	Yes	Yes	Yes
Adjustable feet	Yes	Yes	Yes	Yes	Yes
Emergency stop	Yes	Yes	Yes	Yes	Yes
Wood cage	Yes included	Yes included	Yes included	Yes included	Yes included
AX nr	5113010062	5113010063	5113010064	5113010066	5113010067